# U2 145 and160

## Owner / Service Manual

July 2007 - Third Edition

# U2 145 and160

## Owner / Service Manual

Copyright © 1994-2007 by Sport Kites, Inc. dba Wills Wing, Inc. All rights reserved.
No part of this manual may be reproduced in any form without the express written permission of
Sport Kites, Inc., dba Wills Wing, Inc.

July 2007 - Third Edition

*500 West Blueridge Ave • Orange, CA • 92865 • Phone (714) 998-6359 • FAX (714) 998-0647*
*Internet Web address: http://www.willswing.com • E-mail: comments@willswing.com*

# Contents

**Introduction** ..... 1
**Disclaimer and Warning** ..... 2
**Technical Information and Placarded Operating Limitations** ..... 3
**U2 Reassembly After Shipping and Breakdown for Shipping Procedures** ..... 6
Reassembling the U2 after breakdown for shipping
To remove the rear leading edges for shipping follow these steps
**U2 Set-Up Procedure** ..... 10
**Preflight Procedure** ..... 18
Along the left leading edge
At the left wingtip
Along the trailing edge, left wing
From the rear keel
Along the trailing edge, right wing
At the right tip
Along the right leading edge
Under the glider at the control bar
At the nose
**Launching and Flying the U2** ..... 20
Minimum controllable airspeed and minimum sink airspeed
Using wing tufts to find the minimum sink speed of your glider
**Platform Towing** ..... 24
**Aerotowing** ..... 25
**Trimming Your Glider in Pitch** ..... 26
**Speeds to Fly and Using Your Airspeed Indicator** ..... 27
**Using the VG System** ..... 28
**Landing the U2** ..... 29
Using drag devices during landing
**U2 Breakdown** ..... 34
**U2 Stability Systems** ..... 37
**U2 Sprog Adjustment and Flight Testing** ..... 37
Sprog measurement
Method of adjustment
Test flight
**Maintenance** ..... 39
**Parts Ordering and Parts Replacement** ..... 40
Every Six Months
Every Year
Special circumstances
A note about cables and cable maintenance

**Removing the Sail from the Airframe and Re-Installing** ..... 43
Sail removal
Re-installing the sail on the frame
**Glider Tuning** ..... 45
CG adjustment
Turn trim
Airframe
Battens
Tip Wand Receptacles - rotational alignment
Sail tension
Twisting a tip
Batten tension
**Car Top Mounting and Transport** ..... 47
**In Closing - A Few Final Words on Your Safety** ..... 48
**HGMA U2 145 COMPLIANCE VERIFICATION SPECIFICATION SHEET** ..... 50
**HGMA U2 160 COMPLIANCE VERIFICATION SPECIFICATION SHEET** ..... 51

# Introduction

Thank you for purchasing a Wills Wing glider, and welcome to the world wide family of Wills Wing pilots. We are a company of pilots and aviation enthusiasts, and our goal is to serve your flying needs now and in the future, as we have done for pilots throughout the world since 1973.

We encourage you to read this manual thoroughly for information on the proper use and maintenance of your Wills Wing glider. If at any time you have questions about your glider, or about any aspect of hang gliding that your Wills Wing dealer cannot answer, please feel free to give us a call.

Because there is no regulation which requires the registration of hang gliders, Wills Wing has no way to maintain an accurate contact list of the owners of the hang gliders we manufacture. As a result, Wills Wing has no reliable way to contact owners directly about service and safety issues. It is therefore, of necessity, your responsibility as an owner to check periodically for service advisories and technical updates that relate to your glider. You can do so most effectively by going to our web site at www.willswing.com. The site features extensive information about Wills Wing gliders and products, a Wills Wing Dealer directory, a comprehensive list of service and technical bulletins, the latest editions of owners manuals, our complete retail price list, a search engine, e-mail and more.

The most important contents of our internet site are the service and technical bulletins, technical articles, and the latest editions of owners manuals. These are your best sources for safety and airworthiness advisories and information on Wills Wing products. Many of the documents are published in Adobe Acrobat format. A free viewer for Acrobat files is available at http://www.adobe.com. Note that the current release is 6.0. and documents may not open or display properly in earlier versions.

If you are unable to obtain service information from the web site, you can contact us by email, by U.S. mail or by telephone.

We wish you a safe and enjoyable flying career, and, once again, welcome aboard!

Rob Kells, Mike Meier, Linda Meier, and Steven Pearson

Wills Wing, Inc.

## Disclaimer and Warning

Hang gliding is a form of aviation. Like any form of aviation, its safe practice demands the consistent exercise of pilot skill, knowledge of airmanship and weather, judgment and attention at a level which is appropriate to the demands of each individual situation. Pilots who do not possess or exercise the required knowledge, skills and judgment are frequently injured and killed. The statistical rate at which fatalities occur in hang gliding is approximately one per thousand participants per year.

The Federal Aviation Administration does not require a pilot's license to operate a hang glider. Hang gliders and hang gliding equipment are not designed, manufactured, tested or certified to any state or federal government airworthiness standards or requirements. Federal Aviation Regulation Part 103 states in part, "ultralight vehicles are not required meet the airworthiness certification standards specified for aircraft or to have certificates of airworthiness" and "operators of ultralight vehicles are not required to meet any aeronautical knowledge, age, or experience requirements to operate those vehicles or to have airman or medical certificates." Wills Wing hang gliding products are not covered by product liability insurance. As a hang glider pilot, you are entirely responsible for your own safety. You should never attempt to fly a hang glider without having received competent instruction. We strongly recommend that you not participate in hang gliding unless you recognize fully and wish to personally assume all of the associated risks.

Please fly safely.

## Technical Information and Placarded Operating Limitations

The U2 160 and U2 145 have been tested and found to comply with the Hang Glider Manufacturers Association (HGMA) Airworthiness Standards. The HGMA standards require:

1. A positive load test at root stall angle of attack at a speed equal to at least the greatest of:

    a. 141% of the placarded maximum maneuvering speed

    b. 141% of the placarded maximum rough air speed

    c. 123% of the placarded speed never to exceed

    for at least three seconds without failure.

    The required speed for the U2 for this test was 65 m.p.h..

2. A negative 30 degree angle of attack load test at a speed equal to at least the greatest of:

    a. 100% of the placarded maximum maneuvering speed

    b. 100% of the placarded maximum rough air speed

    c. 87% of the placarded speed never to exceed

    for at least 3 seconds without failure.

    The required speed for the U2 for this test was 46 m.p.h..

3. A negative 150 degree angle of attack load test at a speed equal to at least the greater of 30 m.p.h. or 50% of the required positive load test speed for at least 3 seconds without failure.

    The required speed for the U2 for this test was 32 m.p.h..

4. For the U2 with a Vne of 53 m.p.h., pitch tests at speeds of 20 m.p.h., 37 m.p.h. and 53 m.p.h. which show the glider to be stable over a range of angles of attack from trim angle to 20 degrees below zero lift angle at 20 m.p.h., and from trim angle to 10 degrees below zero lift angle at 37 m.p.h., and from 10 degrees above zero lift angle to zero lift angle at 53 m.p.h..

5. Flight maneuvers which show the glider to be adequately stable and controllable throughout the normal range of operation.

Note: The U2 has been designed for foot launched soaring flight. It has not been designed to be motorized, tethered, or towed. It can be towed successfully using proper procedures. Pilots wishing to tow should be USHGA skill rated for towing, and should avail themselves of all available information on the most current proper and safe towing procedures. Suggested sources for towing information include the United States Hang Gliding Association and the manufacturer of the towing winch / or equipment being used. Wills Wing makes no warranty of the suitability of the glider for towing.

---

*Because of the design of the nose catch for the bottom front wires on the U2 it is critically important that the nose line be attached properly during platform towing operations. In no case should the nose line be attached in such a way that there is any possibility that the nose line can pull forward on the nose wires, nose tang or nose tang handle, or, in any other way, contribute to disengagement of the nose wires. Please read the section on towing for more information.*

---

Flight operation of the U2 should be limited to non aerobatic maneuvers; those in which the pitch angle will not exceed 30 degrees nose up or nose down from the horizon, and the bank angle will not exceed 60 degrees. The U2 is generally resistant to spinning, especially at VG settings of less than 50% (VG middle or looser). At VG settings greater than 50% (VGM to VG full tight), the U2 becomes progressively more susceptible to spinning, though it is still characteristically resistant to spinning. Any spin and / or the recovery from the spin may involve a possibility of a loss of control of the glider, possibly including in flight inversion and possible structural failure.

Recovery from a spin requires unstalling of the wing, and it is therefore critically important that in the event of a spin, no application of nose up pitch control be held. The U2 will tend to recover from a spin once control pressures are relaxed. To recover from a spin, move to the center of the control bar and gently pull in to position the basetube below your shoulders. Do not pull in rapidly and do not "stuff" the bar. As the nose lowers and the angle of attack is reduced, the stall will be broken and the spin will stop. In an aggravated spin, be prepared for the nose to pitch down significantly, and for the glider to accelerate to a high speed during the resulting dive. Ease the control bar out gently to recover to level flight. Recognize that such recovery will consume significant altitude, and will result in the glider assuming an unpredictable heading and attitude. Recovery from a spin at low altitude or in the vicinity of terrain or other aircraft may involve a flight trajectory which intersects the terrain or another aircraft at a high rate of speed. In view of the unpredictable nature of spins and spin recovery, Wills Wing recommends that no attempt should ever be made to deliberately spin the glider. The U2 provides the pilot with a high degree of pitch authority, in combination with a very low twist sail. As a result, it is possible to produce a very aggravated and severe stall, the recovery from which may involve very severe pitch down rotation, the pilot going weightless, and the glider recovering via an unpredictable trajectory with a significant altitude loss. Therefore, aggravated stalls should not be induced except on landing flare.

The maximum steady state speed for a prone pilot in the recommended weight range full forward on the control bar with the VG set full tight will range from approximately 53 m.p.h. to as high as 63 mph or more for the U2, depending on wing loading, harness design and adjustment, and glider tuning. The placarded speed never to exceed for the U2 is 53 m.p.h. The Vne speed will be achieved for a prone pilot with the control bar between mid-thigh and full arms extension. The placarded maximum speed for maneuvering flight or flight in rough air is 46 mph. This speed will be achieved for a prone pilot with the control bar basetube approximately two to four inches below the waist. This speed should not be exceeded in anything other than smooth air. No abrupt maneuvering or control inputs should be made at anything above this speed. The stall speed of the U2 at maximum recommended wing loading is 25 m.p.h. or less. The top (steady state) speed at minimum recommended wing loading for a prone pilot with a properly designed and adjusted harness is at least 35 m.p.h.. All speeds given above are indicated airspeeds, for a properly calibrated airspeed indicator mounted in the vicinity of the pilot.An airspeed indicator marked with the appropriate speed ranges is available for the U2 and it is recommended that the pilot fly with this or some other airspeed indicator and use it as an aid to comply with the placarded limitations. Refer to the section on using the airspeed indicator for further information on speeds to fly.

The recommended hook in pilot weight range for the U2 is:

U2 160: 160 - 260 lbs.
U2 145: 140 - 220 lbs.

Be advised that pilots with hook in weights of less than 20 lbs above minimum will find the U2 more demanding of pilot skill to fly, and that pilots hooking in within 20 lbs of the maximum will experience some relative degradation of optimum sink rate performance due to their higher wing loading, as well as increased difficulty in foot-landing the glider in very light winds or at high density altitudes.

A minimum USHGA Intermediate (III) level of pilot proficiency is required to fly the U2 safely. Pilots are advised that the optimum proficiency level for the U2 is higher than the minimum recommended. In particular, due to the high L/D of the U2, and the tendency of the glider to retain a high L/D at higher speeds, it is important that the pilot have well developed landing approach skills in order to insure the ability to land safely within a landing area of restricted size. Operation of the glider by unqualified or under qualified pilots may be dangerous.

Operating the U2 outside of the above limitations may result in injury and death. Flying the U2 in the presence of strong or gusty winds, or turbulence may result in loss of control of the glider which may lead to injury and death. Do not fly in such conditions unless you realize and wish to personally assume the associated risks. The U2 was specifically designed and developed for recreational soaring, to achieve the maximum level of performance possible at the minimum practical glider weight. The stability, controllability, and structural strength of a properly maintained U2 have been determined to be adequate for safe operation when the glider is operated within all of the manufacturer specified limitations. No warranty of adequate stability, controllability, or structural strength is made or implied for operation outside of these limitations. The U2 is specifically not designed, nor is it suitable for aerobatic maneuvers. Because of the U2's broad speed range and high degree of aerodynamic efficiency it is possible to exceed the placarded VNE speed by a wide margin, and, as a result, it is possible if abrupt maneuvers are performed at such very high speeds to induce loads on the structure beyond those for which the glider has been tested. Wills Wing is well aware that pilots have in the past, and continue in the present to perform maneuvers and fly in conditions which are outside the recommended operating limitations for their gliders. Please be aware that the fact that some pilots have exceeded these limitations in the past without dangerous incident does not imply or insure that the limitations may be exceeded without risk. We do know that gliders which meet all current industry standards for airworthiness can suffer and have suffered in-flight structural failures, both as a result of turbulence, and as a result of various deliberate maneuvers outside the placarded operating limitations, including, but not necessarily limited to aerobatics. We do not know, and cannot know, the full range of maneuvers or conditions which may cause the pilot’s safety to be compromised, nor can we test the glider in all possible circumstances.

# U2 Reassembly After Shipping and Breakdown for Shipping Procedures

The front leading edge is 50mm (1.97") oversleeved with 52mm (2.05") at the nose and crossbar junction. The rear leading edge is 50mm (1.97") oversleeved with 52mm (2.05") at the outer sprog attachment point. The front end of the rear leading edge is slotted and engages in a clevis pin installed in the front leading edge. The rear end of the rear leading edge contains a receptable for the tip wand, secured in place by a bushing and clevis pin five inches from the rear end of the tube and a small screw 1/2" from the end of the tube. The clevis pin also passes through a tang on the rear sail mount webbing strap and secures this strap to the rear leading edge.

## Reassembling the U2 after breakdown for shipping

1. Lay the glider down on its back (bag zipper up) on a smooth, clean work surface. Unzip the glider bag, pull it off of the glider at the front and rear, and unfold the sail to it's full length. Remove the wing tip cover bags and the velcro sail ties from the glider, and unroll the sail part way.

2. Identify the rear leading edges as to left and right in order to make sure you are mounting the correct rear leading edge into the correct front. Check the “right” / “left” label or marking on the rear leading edges. Remember that the right leading edge is to your left as you look from the rear when the glider is upside down. If the leading edges are not marked, identify left and right by consideration of the following:  The sprogs are mounted to the back side of the leading edges, the sprog cables are attached to the top of the leading edges, and the wand receptacle is at the out-board end of the leading edge. The photo below shows the left rear leading edge, in a right side up orientation.

3. Working on one wing at a time, and working with the appropriate rear leading edge, fold the outer sprog which is attached to the rear leading edge "forward" against the rear leading edge. Turn the rear leading edge upside down (because the glider is lying on its back, upside down) and slide the front end of the rear leading edge tube into the sail through the outboard sprog access zipper, leaving the sprog outside of the sail.

4. Then continue to slide the rear leading edge forward, allowing the sprog end to remain outside the sail, and slide the rear leading edge into the front leading edge. Align the rear leading edge properly so that the sprog bracket is on the inside of the leading edge, and slide the rear leading edge forward, rotating as necessary, until the slot in the rear leading edge engages securely on the pin in the front leading edge. When the rear leading edge is fully engaged, you will not be able to rotate it.

5. Find the sail mount strap and stretch it towards the rear of the leading edge. Position the sail mount strap on the bottom of the leading edge tube (which will be on top with the glider upside down) and make sure the strap is not wrapped around the tube or twisted. Remove the safety ring from the clevis pin located five inches from end of the leading edge, remove the clevis pin, and pass it through the tang in the sail mount webbing. Re-install the clevis pin in the leading edge, and re-install the safety ring on the clevis pin. Check again to make sure that the sail mount strap is mounted to the bottom of the leading edge tube and not twisted or wrapped around the tube.

---

*Note: The exact length of the adjusted sail mount webbing strap is an important tuning adjustment - do not loosen this strap in order to install it on the rear leading edge. (See the section on Sail Tension in the Glider Tuning section of this manual for more information on the adjustment of this strap.) If you are having trouble installing the strap, first check to make sure that the rear leading edge is fully engaged in the front leading edge. If the slot in the rear leading edge is not engaged on the clevis pin in the front leading edge, the overall leading edge length will be one half inch too long. After confirming that the rear leading edge is fully engaged, if you are unable to stretch the sail mount strap far enough to install the securing pin, dismount the sail at the nose of the glider, mount the rear, and then remount the sail at the nose. If necessary, you can mount the nose of the sail after the glider is set up - but if you wait until then to mount it, make sure to spread the wings carefully and ensure that the sail is riding forward on the leading edges as you do so. Otherwise, you could tear the sail.*

---

6. Remount the inboard sprog to the front leading edge, making sure to align the sprog properly (cable on top of the sprog, and not wrapped around the sprog). Note: Check the sprog after installation for any tendency to twist or rotate relative to its proper orientation (tang and cable on top) when deployed. If the sprog has been flipped around the cable during the disassembly and re-assembly process, it will leave a twist in the cable which will then induce a tendency for the sprog to twist out of proper alignment when the glider is fully set-up. If you notice this, dismount the sprog and flip it around the cable as necessary, so that there is no twisting tendency induced by the cable, and then remount it. The nut on the bolt which connects the clevis fork to the sprog pillar should be just snug on the clevis fork, but not so tight at to compress the fork against the pillar or create any friction or resistance to the ability of the fork to pivot freely on the sprog pillar.

7. Adjacent to the inboard sprog in the top surface of the sail is the inboard transverse batten and batten pocket. It is necessary if the glider is broken down for shipping to slide the transverse batten at least part way out of the pocket in order to allow for the sail to be folded over. Locate the transverse batten, slide it all the way into the pocket, and pull the webbing retainer over the end of the batten to hold it in place. The outboard transverse batten will also have been slid partway out of its pocket, but this is necessary every time the glider is packed up after flying, so it is not necessary to re-install this batten until you are in the process of setting the glider up to fly it. Fold the inboard sprog to the rear and against the leading edge, stowing it underneath the outboard sprog. Place a velcro around the sail at this point. Fold the tip of the sail over, roll it up and re-install the tip bags. Put the glider bag back on and zip it up.

## To remove the rear leading edges for shipping follow these steps

This process will basically be the reverse of installing the rear leading edges after shipping. Before beginning, read through the section above on how to re-install the rear leading edges. While following the instructions below, refer to the photos in the section above for reference, if necessary.

1. Lay the glider on the ground or floor, unzip the bag and remove the velcro ties. Remove the tip bags and lay the tips out flat. The sprog access zippers should be fully unzipped.
2. Working through the open rear sprog access zipper, locate the clevis pin which secures the sail mount strap to the leading edge. Remove the safety ring from the sail mount clevis pin and remove the pin from the leading edge and from the tang on the sail mount strap. Re-install the clevis pin in the leading edge tube and re-install the safety ring.
3. Check to see that the rear leading edges are labeled “Left” and “Right.” If they are not, mark them with an indelible marker. Remember that left and right are reversed if the glider is lying “on its back”, upside down.
4. With the rear end of the rear leading edge outside the sail, through the open rear sprog access zipper, and with the outer sprog folded towards the nose (the normal configuration when packed up) pull the rear leading edge straight aft to disengage it from the front, and then continue to slide it carefully out of the sail through the outboard sprog access zipper opening. Tape or pad the edges of the front end of the rear leading edge tubes, and the rear of the front leading edge tubes to prevent sail damage during transit.
5. The inboard sprogs must be dismounted from the leading edges for packing as they will not fold forward without interference. The cables are permanently attached to the sprogs, and may be left attached to the leading edges. Before removing the sprog, check that the jam nut is properly tightened on the clevis fork at the front of the sprog so that the adjustment is preserved. If there is no jam nut installed, apply adhesive tape to the junction of the clevis fork and the threaded insert into which it is installed, to preserve the adjustment. Remove the screw and nut that secures the clevis fork at the front of the sprog to the sprog pillar in the leading edge sprog bracket and dismount the clevis fork from the sprog pillar. Re-stow the screw and nut in the pillar and tighten the nut enough so that it won't fall off in transport. Pad the ends of the sprogs for packing and stow them carefully along the leading edges, taking care not to allow the cables to become bent or kinked.
6. Unroll the sail as necessary to gain access to the inboard transverse batten (located adjacent to the inboard sprog) and slide it part way out of the pocket so that it will not interfere with folding the sail over. Roll the sail back up and carefully fold the rear of the sail over against the front, and replace the bag on the glider.

# U2 Set-Up Procedure

*A number of set up operations are made easier by the use of the Set-Up Tool - a six inch length of 3/4" tubing included with your glider.*

1. Lay the glider on the ground, with the bag zipper up, with the bag at right angles to the wind.
2. Undo the zipper, remove the battens, and remove the control bar bag.
3. Lift and deploy the control bar legs.
    a. Remove the ball lock pins from downtube bottom plug and inspect the pin at this time for any signs of wear or damage. Note: Be sure to depress the button when removing or inserting the ball lock pins. Otherwise, you may dislodge the sleeve in the downtube end fitting which retains the sidewire tang. (This sleeve has to have only a light press fit to hold it in place, as it must be removable in order to change the bottom side wires.)
    b. Align the downtube bottom plug on one side properly in the appropriate basetube corner fitting and install the ball lock pin securing the plug to the basetube bracket.
    c. Repeat for the other side. Thread the VG rope through the VG cleat.

*Make sure that the small bushing that secures the side wire tang in the downtube end fitting is in place, and that the side wire tang is properly secured. Also make sure that the ball lock pin is fully and securely engaged in the basetube end bracket. Note that the ball lock pins are critical structural components and must be replaced if they show any sign of wear or damage.*

4. Flip the glider upright on the control bar. Try to set the basetube on level ground, and try to avoid rocks. Remove the glider bag and all the velcro sail ties. Do not remove the leading edge tip protector bags at this time. Before spreading the wings, pull upwards on the wires attached to the front of the root battens, and lift the battens up over and onto the studs on top of the keel. (This is easiest to do at this point in the set up.)
5. Spread the wings almost all the way and erect the kingpost.

6. Remove the battens from the batten bag, and check each batten for symmetry against the corresponding batten from the other wing. Align the battens at the nose, and at about the 60% chord point as shown. There should not be any deviation of more than 1/8" from one to the other along the full length of the battens. Note: If you fly in a dusty or sandy environment, it will help to prolong the life of your batten pockets in your sail if you wipe each batten with a rag before you insert it in the batten pocket.

7. Wills Wing convention is that black tipped battens go in the right wing and white tipped battens in the left. Top surface cambered battens are numbered from the tip inwards, and the shortest cambered batten in a U2 is designated as the "#2" batten (there is no "#1 batten"). Working from the root out, install the three longest cambered top surface battens in each wing of the sail. Do not engage the rear tips in the trailing edge at this time.

---

*Insert the battens carefully, so as to minimize stress and wear on the sail. Do not hold the battens by the rear tips, and do not apply significant force to the rear tips during insertion or removal - either the spring type tips of the lever type tips can be broken if the force required for insertion of removal is applied to the tip. Do not insert or remove the longest top surface battens with the crossbar tensioned and never insert or remove battens with heavy wind pressure on the top of the sail or in any condition which causes the battens to slide with great resistance in the pockets. Take care when inserting the longer cambered battens that the front batten tip does not catch the aft edge of the mylar insert through the sail and fold it under. This is best avoided by keeping the trailing edge of the sail as low as possible, and lifting on the batten in the area behind the mylar pocket if necessary as you push the batten in. If the mylar insert does become folded under when inserting a batten, remove the batten, smooth the mylar down, and re-install the batten. Also take care not to force the rear batten tips into the ground when installing or removing the*

*battens. When working with the longest inboard batten it is helpful to lift the rear end of the keel slightly, and also to insert the batten initially upside down, flipping it over after it is inserted about a quarter of the way.*

---

*If you choose not to check your battens for symmetry before each flight, you should, at a minimum check them once every five flights, or at any time that you experience a hard landing or groundhandling mishap.*

---

8. Spread the wings all the way and check all cables for any twisted thimbles or tangled cables. At the rear of the keel, pull on the 205 leech line that is attached to both the top rear wire and the sweep wire in order to retrieve the sweep wire from inside the keel pocket. Pull the sweep wire out the rear end of the keel pocket. For maximum "leverage" insert the set up tool in the loop of leech line attached to the sweep wire keyhole tang. Tension the sail by continuing to pull back on the sweep wire and secure the sweep wire by installing the keyhole tang onto the keyhole collar on the rear wire bolt. Make sure the tang slides fully forward in the slot on the collar so that the narrow part of the keyhole slot is fully captive in the narrow part of the bolt collar, and make sure that the button lock pops up behind the tang. Now install the top rear wire keyhole tang onto the same keyhole collar, again making sure that the tang is fully installed, and that the button lock pops up behind the tang. You can stow the excess leech line inside the neoprene sleeve on the rear keel.

---

*Never install the keyhole tang onto the keyhole bolt without making absolutely sure that the tang is fully engaged on the narrow neck of the bolt, and tensioned forward into the fully locked position. An in-flight disengagement of this attachment will cause a complete loss of structural support of the glider and a total loss of control. Never attach the pull string to the collar, even temporarily. Also, avoid applying any forward, rearward, or sidways pressure on the button spring, or allowing the tang to catch on the back of the button, as this can result in the button becoming bent and not deploying properly.*

---

9. The next step is to install the outer transverse battens and the tip wands. Remove the wingtip protector bag. Unfold the tip of the sail and open the velcro closure between the top surface and bottom surface at the tip. The outboard transverse batten will be partly inserted into its batten pocket. Slide the batten all the way into the pocket and pull the elastic retainer over the end of the batten to retain it in the pocket. The tip wands are tapered, the larger end is installed in the receptacle in the end of the leading edge tube. Rotate the tip wand cam lever outside the sail. Holding the larger diameter end of the tip wand in your hand, reach into the opening in the tip of the sail

and work your way up to the end of the leading edge. Install the tip wand into the receptacle, and push it all the way in until it bottoms out.

Working from the front side of the leading edge, facing the glider, hold the end of the leading edge tube from underneath in one hand and grasp the wand lever and cup in the other hand. Place the open end of the wand cup against the front side of the tip wand. While supporting the leading edge tube by pulling it towards you, push back against the wand with the wand cup, allowing the cup to slide outwards along the wand as the wand bows back. (Keep in mind here that you are not trying to "stretch" the sail lengthwise along the wand - that won't work. You are bowing the wand back by pressing the cup against the front, which will naturally pull the sail outwards around the bow of the wand as you do so. Also keep in mind that the wand must be allowed to bow for this to work; you cannot be holding onto the wand with your other hand during this operation.) As the wand cup reaches the end of the wand, it will rotate and pop into place over the end of the wand.

10. The next step is to cam over the tip wand cam lever, tensioning the sail at the tip. Rotate the string to the front side of the tip wand cam lever and slide the Set-Up Tool over the lever as shown.

11. Holding the end of the leading edge tube in one hand, grasp the set up tool and rotate the tip wand cam lever towards the keel and then towards and against the leading edge. Keep the cam lever

parallel to the ground as you cam it over. Note that in order to cam the lever over, the wand has to bow backwards from the leading edge into a curved shape. If you hold, or press against the wand from the front, it will prevent this. If you do hold the wand during this process, pull forward (towards you) on the wand to assist the bowing of the wand.

After you cam the lever over, remove the tool. Look into the sail from the tip and verify that the most outboard internal rib is fully zipped up.

12. Install the remaining outboard top surface battens. Secure the shortest cambered battens with a double purchase loop of the 205 leech line. After installing the tip battens, open and re-close the velcro closure between the top and bottom surface at the tip (to ensure that both surfaces of the sail mate cleanly in this area). At this time you can install the batten tips for the remaining cambered battens into the hem of the trailing edge. The technique for this will depend on whether the glider is fitted with spring tip battens or lever battens. We will cover the installation of the spring tips first. The set up tool is a multi-function tool and works very well to aid in installing the spring tips. At each batten, make sure the opening in the underside of the trailing edge hem is spread to accept the tab on the batten tip. Hold the trailing edge hem in one hand, with the trailing edge folded upward. Place the open end of the tool on the spring tip end below the tab which fits into the trailing edge. Push forward on the spring tip fully compressing it against the end of the aluminum batten, pull back on the hem of the sail and fold the hem down over the tab on the batten tip. Make sure the tab slides fully into the hem.

13. If your glider is equipped with lever type tips, use the following procedures. The lever tip incorporates a hinge and a snap locking mechanism, as well as a threaded shank that allows for adjustment of the overall batten length, and hence the chordwise tension that the batten puts on the sail. The locking mechanism can be broken if it is not released properly before the lever portion of the tip is rotated upwards. If it does break, it will usually break at the locking hook on the lever (rear) portion of the tip. Also the hinge portion can pop apart relatively easily. (This is not a failure of the tip, and you can easily pop the hinge back together again.)

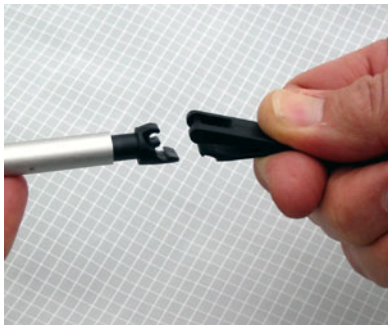

If you do have a failure of the locking hook on the lever portion, simply pop the hinge apart and pop on a new lever part.  It is also possible, though less likely, to break the forward portion of the tip. If that happens, unthread the tip from the batten and thread in a new piece.

Once the batten is installed, in order to fit the batten tip into the trailing edge hem, you will need to unlock the lever part of the tip and pivot it upwards. To unlock the tip, place a slight downward pressre on the top of the lever portion of the tip, and squeeze upwards on the bottom of the lever portion just behind the locking clasp. Then pivot the lever tip upwards. You should not feel any resistance to the lever rotating upwards - if you do you haven't properly released the locking portion. If you hear a click when pivoting the lever upwards, it is likely that you have broken, or partly failed the locking tab on the lever.

After the rear of the tip has been rotated upwards, fit it into the gap in the hem of the trailing edge and then rotate the tip downwards until it locks into place. You should hear a click at this point, and the tip should be securely held in the locked position. (Note: A tip with a failed catch will still "click" when you rotate the lever downwards into position, but depending on the degree of failure of the catch, it may not support an upward load on the trailing edge sufficient to keep the tip locked in position.)

14. The next step is to deploy the sprogs and secure them in position. Before doing so, working through the sprog access zippers, preflight the following items:

    a. The remaining internal ribs to confirm that they are fully zipped up.

    b. The sprog hardware, including the leading edge sprog brackets, the attachment of the sprogs to these brackets, and the spog cable attachments at both ends of each sprog cable.

    c. The leading edge crossbar junction hardware, including the nut, bolt and safety ring at this junction and at the bottom side wire attachment to the crossbar.

To deploy and secure each sprog, swing the sprog away from the leading edge and align it in the center of the rear end of the sprog access zipper, such that the rear end sprog paddle lies below both the transverse batten and the short piece of webbing in the sail. Rotate the sprog as necessary to align it such that the cable pulls directly from the top of the sprog. (Note: The sprog should align easily and remain in this position - with the tang on top. If it will not remain aligned properly, there is probably a twist in the sprog cable. To fix this, dismount the sprog from the leading edge and rotate the sprog around the cable until the twist is removed.) Fully close the sprog access zipper and this will secure the sprog in the proper position underneath the transverse batten and capture it in position with the webbing. Note: Do not lift on the sail at or near the trailing edge while trying to close the sprog access zipper. If you want to lift the wing to gain easier access to the underside of the glider, lift the wing by the leading edge tube.

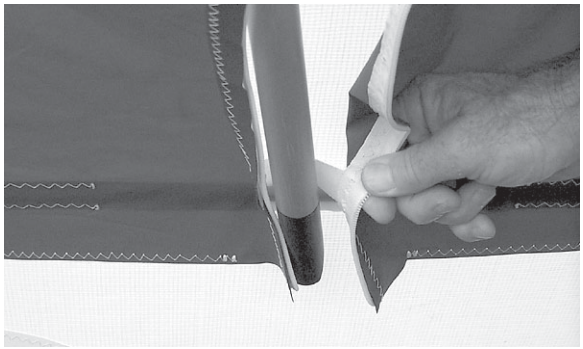

15. Attach the bottom front wires to the bottom of the nose. Install the keyhole tang over the keyhole collar by pulling down on the nose of the glider while pressing the tang upwards over the collar. Remember, it is the pulling down of the glider's nose rather than the upward pressure on the tang that allows you to install the tang over the collar. Make sure that the tang is fully seated in the collar, and that the button lock pops up in front of the tang, locking it in place.

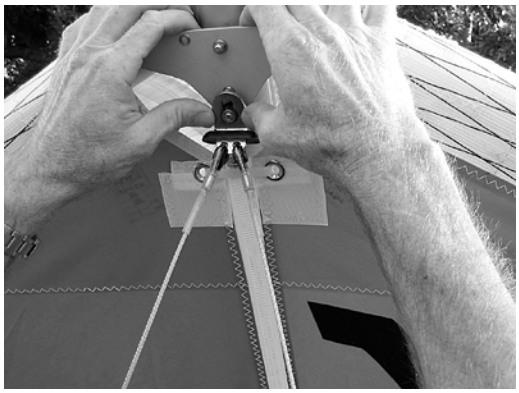

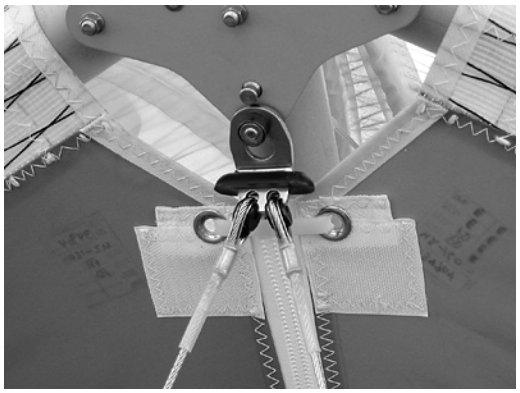

16. With the center zipper open, look inside the sail to preflight the following items:
    a. The crossbar center section, including the crossbar hold down rope, the sweep wire hinge bracket attachment to the crossbar, and the hinge bracket center hinge pin, push nut and safety ring,
    b. The routing and condition of the VG line and the attachment and alignment of the VG triple blocks (pulleys).
    c. Each crossbar half along it's entire length.
    d. The top to bottom surface sail velcro attachments and internal ribs.
    e. The main / backup hang loops. Verify that the main hang loop spreader bar is positioned just below the bottom surface.
17. Check the operation of the VG througout the range, and leave the VG set full tight. Zip up the center sail zipper, and the lateral zippers at the rear end of the bottom surface in the root.
18. Install the nosecone as follows - fit the nose cone to the nose of the sail and stretch the top rear end of the nose cone back along the center line of the glider. Press down to attach the velcro. Then pull the bottom front end of the nose cone tight around the bottom of the nose and attach the velcro. Finally, re-adjust the top rear attachment as necessary to remove any gaps between the nosecone and the sail along the sides of the nosecone.

---

*It is important to fit the nosecone carefully so that there are minimal discontinuities in the sail in the nose area. Any discontinuity in the sail in the nose area, or along the leading edge will tend to promote premature separation of the airflow, leading to an increased stall speed and reduced performance.*

---

19. Return the VG to the full loose position.
20. Install the bottom surface battens. The bottom surface battens are retained by a narrowing at the front of the bottom surface batten pockets. You will feel increased resistance as you push the battens into this area.
21. Conduct a complete preflight of the glider, checking all assemblies which have not already been checked.

# Preflight Procedure

## Along the left leading edge

Carefully check the entire length of the leading edge pocket to insure that the mylar insert is lying flat in the pocket. If any section of the mylar is folded under, de-tension the crossbar, remove the batten closest to the area of distortion, and unfold the mylar.

*Failure to correct folded under or severely creased mylar will cause a severe alteration of the flight characteristics of the glider which may lead to a dangerous loss of control.*

Look inside the bottom surface where the bottom side wire enters the sail, and make sure that the bottom and top side wires are properly secured to the crossbar, that the thimbles are not cocked on the tangs, and that the nut and safety ring are in place.

While pushing up on the leading edge between the nose and the crossbar junction, step on the bottom side wire with about 75 lbs. of force. This is a rough field test of the structural security of the side wire loop, the control bar and the crossbar, and may reveal a major structural defect that could cause an in-flight failure in normal operation.

## At the left wingtip

Check that the tip wand lever access velcro closure is cleanly mated and closed.

## Along the trailing edge, left wing

Check that there are no tears in the sail material along the trailing edge.

Check that all battens are properly secured.

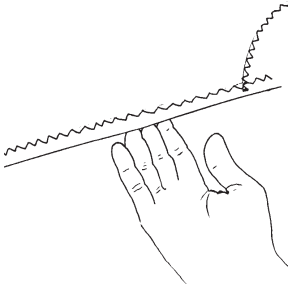

Check that the sprogs are properly secured in position supporting the transverse battens, that the transverse battens are properly located and secured in the sail, and that the sprog access zippers are properly closed.

## From the rear keel

Check again that the keyhole tangs are fully engaged to the keyhole collar and that the button lock is up and engaged. Check the attachment of the hang loop to the kingpost. This will require that you peel back the protective sock over this junction.

## Along the trailing edge, right wing

Same as for left wing.

## At the right tip

Same as for left tip.

## Along the right leading edge

Same as for left leading edge.

## Under the glider at the control bar

Sight down the downtubes, making sure that they are straight.

Check that the ball lock pins are fully inserted and secure.

Check the cables at the control bar corners, making sure there are no kinks or twisted thimbles. Check for proper installation of all nuts and ball lock pins at the control bar corners. Check the clevis pins and safety rings at the bottom of each downtube.

Unzip the center zipper.

Check the sweep wire for wear where it passes by the kingpost. Check the kingpost base bracket attachment to the keel.

Check that the routing of all VG ropes and pulleys is clear and straight.

Check the VG operation - the pull should be light initially, becoming harder as the VG tight limit is reached. The return on release should be smooth.

Check that the front keel pocket is secured to itself with the mating velcro surfaces, and that all VG cables and ropes are inside the keel pocket.

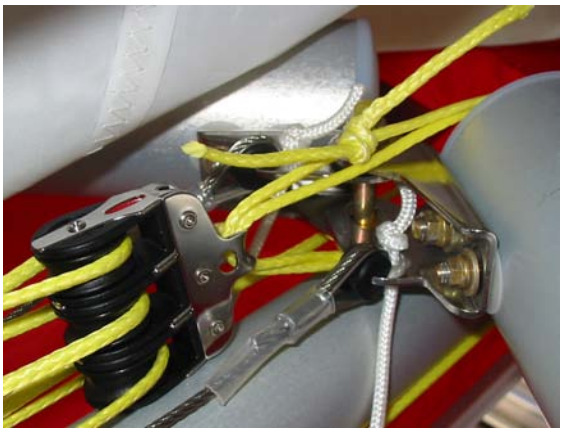

Check the crossbar center section hardware including the hinge bolt, the four nuts on securing the brackets to the crossbar halves, the crossbar center hold down rope, and the attachment of the rear VG triple block to the sweep wire spreader bar.

Check for wear on the rope securing the forward VG triple block to the crossbar center ball, and that the knot is secure with a minimum of one inch of rope extending past the knot. See TB20050620.A for replacement instructions.

Check the rapid link that secures the back up hang loop above the keel.

Pull back the neoprene protectors and check the control bar apex bracket hardware, including the clevis pins and safeties, the control bar top plug bolts, and the elbow to apex bracket bolt and nut.

Zip up the bottom surface.

## At the nose

Check that the keyhole tang on the bottom front wires is fully engaged on the collar, and that the button lock is properly engaged. If you are platform towing, and have a nose line attached in this area, check to see that the nose line is not routed in a manner in which it can apply any forward load against the bottom front wires or the keyhole tang. (See the information on Towing elsewhere in this manual.)

# Launching and Flying the U2

*Before launching, hook in to the glider and do a careful hang check. We recommend that you hang as close to the basetube as possible - this will give you lighter control pressures and better control in both roll and pitch.*

1. We recommend that you launch with the VG set between full loose and 1/2 on. Because the U2 uses a conventional VG, there is significant slack in the side wire loop at VG full loose. This may interfere with your ability to position the glider properly in roll prior to launch. Setting the VG partly on will reduce this slack, but will also reduce your roll control authority immediately after launch. Setting the VG somewhere between 1/4 and 1/2 provides a reasonable compromise.

   *If you launch with the VG set partly on, you must make sure that there is no way that you can step on the excess VG rope , and that it cannot catch on anything on the ground. One way to do this is to fold the rope into a flat loop about eight inches long, and tuck it around the outside of the right downtube above the bottom front, rear, and side wires.*

   If the wind is more than 10 m.p.h. or gusty you should have an assistant on your nose wires on launch, and, if necessary, an assistant on one or both side wires. Make sure all signals are clearly understood. The angle at which you hold the glider should depend on the wind speed and slope of the terrain at launch; you want to achieve a slight positive angle of attack at the start of your run.

2. Run aggressively on launch and ease the bar out for lift off.

3. The flying characteristics of the U2 are typical of a high performance flex wing. Make your first flights from a familiar site in mellow conditions to give you time to become accustomed to the glider.

## Minimum controllable airspeed and minimum sink airspeed

There are two important airspeeds with which all hang glider pilots should be intimately familiar; minimum sink airspeed (hereinafter referred to as MSA) and minimum controllable airspeed (MCA). Minimum sink airspeed is that speed at which your descent rate is the slowest possible. It is the speed to fly when you want to maximize your climb rate in lift, or slow your rate of descent to a minimum in non lifting air. (You would normally not fly at MSA in sinking air; the strategy there is normally to speed up and fly quickly out of the sink. By minimizing your time spent in the sinking air you minimize altitude lost, even though you have momentarily increased your sink rate by speeding up.)

*Minimum controllable airspeed* is that speed below which you begin to rapidly lose effective lateral control of the glider. Recognition of this speed and its implications is a more subtle problem than many pilots realize. We have seen several instances of pilots who were having a lot of trouble flying their gliders simply because they were unknowingly trying to fly them too slowly; below the speed at which the glider responded effectively to lateral control inputs. It is our opinion that a great percentage of hang gliding accidents are caused by inadvertent flight below MCA, and subsequent loss of control of the glider with impact preceding recovery. Such incidents are usually attributed to “stalls,” but it is not the stall per se that causes the problem, indeed the glider need not even be “stalled” in the traditional sense.

On most hang gliders, MCA and MSA have evolved towards a common value during the design and development of the glider. This is so because if the wing is tuned so tight that minimum controllable airspeed is at a higher speed than minimum sink speed, then effective sink rate performance can be improved by loosening the wing so as to lower the minimum controllable airspeed. Conversely, if minimum controllable airspeed is reached at a speed below that of minimum sink, the wing can usually be tightened so as to improve glide performance without significant sacrifice in other areas. One important thing to note is that as the VG is tightened, minimum sink airspeed normally goes down, while minimum controllable airspeed goes up. Therefore as you tighten the VG, you will find that at some point you can no longer adequately control the glider at minimum sink airspeed. The exact VG setting at which this happens depends on how active the air is, and how advanced your skills are. On the U2, at the looser VG settings, the opposite occurs - the glider remains controllable at a speed below that at which it is most efficient aerodynamically. As a result, it is quite easy to fly the glider too slowly for optimum sink rate performance, because control is retained well into a partial stall or "mush." As a result, you will often climb more effectively if you speed up a little from your slowest controllable airspeed.

## Using wing tufts to find the minimum sink speed of your glider

Your Wills Wing glider has been equipped from the factory with short yarn tufts on the top surface of each wing. The shadow of these tufts will be visible through the sail. The tufts are useful for indicating the local reversal of the airflow which is associated with the onset of the stall in that portion of the wing. You can use these tufts, as described below, to help determine when you are flying at minimum sink airspeed.

On a flex wing hang glider with moderate twist, the wing experiences a progressive stall, and different spanwise stations of the wing stall at different angles of attack. The tufts have been placed on your wing at the approximate location of the first onset of stall. As the angle of attack is raised further, the stall propagates both outward towards the tips and inward towards the root. If you wish to observe the stall propagation across the whole wing on your glider, you can cut some more tufts from knitting yarn, about 3-4" long, and tape these to the top surface of your sail across the rest of the span. (Note: On a U2, with the VG set full tight, the twist is reduced markedly, and the wing stalls more abruptly, with the stall progressing across the entire span more quickly).

During normal flight the flow will be chordwise along the wing, and the tufts will point towards the trailing edge. When the wing stalls, the tufts will reverse direction, indicating the local flow towards the leading edge.

At the first onset of stall, the tufts will indicate the impending separation by first wiggling, and then deflecting spanwise, before they fully reverse and point forward. The first onset of stall occurs well before the familiar “stall break” in which the glider pitches uncontrollably nose down to recover from the stall. By the time the stall break occurs, all tufts but those farthest outboard will have indicated reversed flow.

On the U2, minimum sink rate is achieved with the tufts deflected spanwise between 45 and 60 degrees. Significant control authority is normally retained even with the tufts indicating 90 degree spanwise flow - however, you will usually achieve better performance at a slightly higher speed.

To find the glider’s minimum sink speed, fly the glider in smooth air, early in the morning or late in the afternoon. When you are well away from the terrain, and well clear of other aircraft, look up at the

wing tufts while you very gradually reduce the speed of the glider. Note the speed at which the tufts indicate a partial spanwise flow - between 45 and 60 degrees of deflection. This is your speed for minimum sink rate. Familiarize yourself with the position of the control bar relative to your body at this speed, with the sound and feel of the wind, with the reading on your airspeed indicator, and with the feel of the glider in terms of pitch and roll pressures. Most of the time when you are flying it will not be practical to look up for extended periods of time at your tufts. Also, in active air, the tuft behavior will be affected by transient changes in angle of attack due to gusts. That is why familiarization with these other, more accessible indicators is important.

After finding your minimum sink speed, experiment with roll control response at speeds just above and just below this speed to find the value of MCA and the corresponding bar position and other indicators for this speed. Realize that your effective MCA is going to be higher and higher as the air becomes more and more turbulent; control response that is perfectly adequate in smooth air will not be good enough in rougher air. At VG 1/4 or looser, you can try flying the glider with the tufts indicating spanwise flow or partially reversed. You will probably find that the glider is controllable, but only with more than normal physical effort. Note that both MCA and MSA come well before the glider actually "stalls" in the traditional sense, i.e. pitches uncontrollably nose down. You may also be able to sense, or your vario may tell you that although the glider has not "stalled" (pitched nose down) your sink rate has increased significantly. In this mode the glider is "mushing."

---

*The VG rope is marked in 25% increments - one mark indicates VG 1/4, two marks VG 1/2 or VGM, three marks VG 3/4 and one long mark at the full pull of the rope indicates VG tight (VGT). The stall and spin characteristics of the U2 are relatively benign at VG settings of VGM (50% or two marks) and looser. At tighter VG settings, the stall becomes more abrupt, and the glider becomes easier to spin . We recommend that flight at speeds less than three mph above minimum sink airspeed be avoided at VG settings of tighter than 75%, except in relatively smooth air. We recommend against deliberate spins, or agressive full breaking stalls, (with the exception of the landing flare).*

---

Once you have familiarized yourself with the glider's characteristics in the range of speeds near minimum sink, you will not need to look at the tufts very often. You will know from bar position and bar pressure, and from the sound and feel of the relative wind when you are at your minimum sink / minimum controllable airspeed. In general, you should not fly your glider below this speed. Be aware, however, that when you are flying at minimum sink in thermal gusts and turbulence, you will experience gust induced separation of the airflow which will periodically cause the tufts on your sail to reverse.

Of course in a turn, your minimum sink *speed* goes up because you are banked, and the bank effectively increases your wing loading which increases your flying *speed* for any angle of attack. But note this: *The tufts indicate angle of attack, without regard to airspeed!* Therefore, if you practice flying various bank angles in smooth air (while well away from any terrain or other gliders) and watch your tufts (on the inside wing, which will be at the highest angle of attack) you will get a feel for the way your minimum sink speed varies at varying bank angles.

Also be aware that in some thermalling situations, such as when trying to maximize climb rate in a thermal with a very strong and very small core, there may be an advantage in overall effective climb performance to flying so slowly that some portion of the inside wing is partially stalled most of the

time. This is, however, an advanced and potentially dangerous technique - it is the beginning of a spin entry, and if pushed just a little too far can result in a sudden loss of control and / or altitude. In general, if the tufts are indicating flow reversal associated with the stall, you will improve both performance and controllability by pulling in and speeding up a little.

One final caution: from time to time a tuft may tend to stick completely to the sail, and fail to properly indicate the direction of local flow. This may result from static buildup, or from the fine threads of the yarn becoming caught on a seam or some dirt or imperfection in the sail. The tuft may stick while indicating normal flow, but most often it will stick after having reversed, such that the tuft will indicate a stalled condition that does not exist. One clue in this situation is to note whether or not the tuft is wiggling. Since flow reversal occurs during a turbulent separated flow, a reversed tuft should be wiggling rapidly. If it is not, it is probably stuck. A tuft indicating normal flow will not usually wiggle. An occasional application of silicone spray to the tufts, and making sure that they are positioned so that they cannot catch on any seam will minimize the problem of sticking.

## Platform Towing

*Special care must be taken in any form of towing. In particular, in platform towing, it is criticaly important that the nose line be attached so that there is no possibility of inducing a spontaneous dis-engagement of the bottom front wires. In particular, there must be no way that the nose line can pull forward on the nose wires, the nose tang, or anything attached to either. See the photos below for the correct and incorrect methods of nose line attachment.*

*The photo above shows a CORRECT method for attaching a nose line for platform towing. Note that the line is cinched over the top of the tang, in front of the tang handle and in front of the wires.*

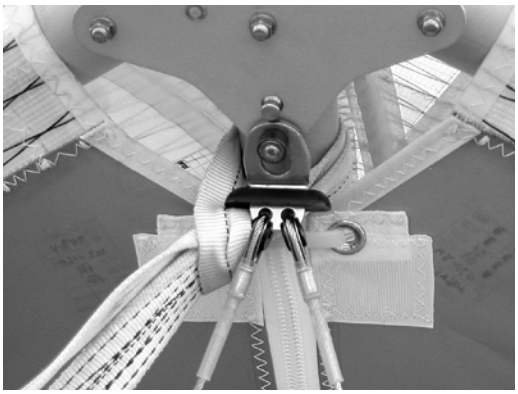

*The two photos above both show INCORRECT methods for attaching a nose line.*

In the photo on the left, the nose line is routed between the wires, making it likely that the nose line could push forward on the nose tang, causing it become disconnected. In the photo on the right, the nose line is outside the V of the wires, but behind the tang handle, which also makes it likely that the nose line could push forward on the tang, causing it to disconnect. In any platform towing launch, a final check of the routing of the nose line and the security of the nose tang should be made prior to launching.

## Aerotowing

The U2 aertows fairly easily as compared with other gliders in its performance class. We recommend that the VG be set to 50% prior to launch. This reduces pitch pressures, slows the roll response of the glider, and provides the best qualitative flight characteristics for flying in formation with the tug at normal aerotow speeds.

The control bar on the U2 is taller than on most other gliders. Ground launch carts designed for the average glider will, when used with the U2, usually put the glider at a higher angle of attack on the cart than is optimum. If possible, it is best to adjust the keel cradle on the cart to re-set the glider to the proper angle of attack. If it is not possible to re-adjust the cart, recognize the the launch will be more demanding, and more dangerous, as the glider will have an increased tendency to leave the cart at a lower speed, where lateral control is reduced, and the tendency to come off the cart with one wing low is increased. To some degree, this can be compensated for by pulling forward through the control bar to position the basetube below your shoulders, and holding tight to the hold down rope. This will cause the glider to raise the keel as it begins to develop enough lift to lift out of the cart. At that point, and not before that point, you can release the rope and ease your weight aft to fly the glider off of the cart. Be prepared to pull in once clear of the cart if necessary so as not to climb more quickly than the tug.

Once clear of the cart and in position behind the tug, use firm lateral movements of short duration for roll and directional control in order to stay in position behind the tug. Do not move to one side of the bar and wait for the glider to respond - this will lead to over control and being out of position, and may lead to roll / yaw oscillations. It is better to "bump" the glider firmly in the direction of the desired correction and then return to center. If you need more correction, bump again. In pitch, stay on top of the situation and be as agressive as necessary to keep the tug on the horizon.

## Trimming Your Glider in Pitch

You will find that the pitch trim of the U2, as well as the basetube position at trim, changes with VG setting. At VG loose, the U2 will normally be trimmed very close to minimum sink. The bar position at trim at VG loose will be relatively far out. As you set the VG tighter, the bar position at trim will move back and the trim speed may increase somewhat.

At tighter VG settings, the amount of pitch pressure felt as you move away from trim also decreases. At VG loose, the pitch "well" is very defined; the pitch force increases quickly as you pull in from trim speed. At tighter VG settings, the pitch well becomes more shallow, and the pitch force increases much less as you pull in from trim speed. At VG full tight, the pitch pressures when pulled all the way forward may be as light as 5 lbs per hand.

Overall pitch trim is affected by several factors. Among the most significant is the location along the keel of your hang point (commonly, if mistakenly, referred to as your “CG location"). The farther forward your hang point is, the faster the glider will trim, the less effort will be required to fly fast, and the more effort will be required to fly slow. If the glider's trim is too slow, it will make the glider more difficult to control in roll, especially in turbulent air and when the nose pitches up on entering a strong thermal. For this reason, you may well find that it is easier to thermal with the VG set between 1/4 and 1/2, as this will speed up the trim and make the glider less subject to pitching up in thermal gusts.

On the U2, hang loop fore and aft position is adjusted by repositioning the kingpost base bracket attachment to the keel. The bracket is secured by a bolt through the keel. There are three holes in the keel to allow three positions in increments of 5/8" over a range of 1.25" of adjustment.

*We recommend that you not stow your glider bag, or any other cargo on the glider. The practice of putting your glider bag inside the sail, for example, can drastically alter the pitch trim and static balance of your glider, and adversely affect its flying and landing characteristics. The best place to carry your glider bag or other cargo is in your harness.*

Another factor that can affect pitch trim is the adjustment of the keel pocket rear support strap. If this strap is too tight, it can slow the trim speed. With the glider fully set up on the ground, and the VG set full loose, there should be 0.5" of slack in this strap.

Finally, the adjustment of the sprogs will affect pitch trim at tighter VG settings, although not at VG settings looser than about 2/3. If there is excessive "transient trim" (increase in trim speed at tighter VG settings), it is an indication that the sprogs are set too low. If there is a marked reduction in trim speed between VG 2/3 and VG tight, it indicates that the sprogs are set too high. When the sprogs are set properly, the trim speed will normally remain the same, or increase slightly up to VG 3/4, and will not be significantly higher or lower at VGT than at VG 3/4.

In the absence of the use of tufts, it has become common for pilots to talk about bar position, or about indicated airspeed, when trying to communicate how to trim a glider properly or how to fly a glider at the proper speed for a given situation. The problem is that these methods are unreliable and inconsistent from one pilot to another even on the same glider. The angle at which your harness suspends your body in your glider has a great deal to do with your perception of the bar “position” relative to your body. Airspeed indicators vary in their indicated airspeed depending on the make of the instrument, its calibration, any installation error, etc. The use of tufts gives you an absolute first hand indication of the actual aerodynamic event associated with two critically important airspeeds on your glider. It is a potentially useful tool that may improve your flying.

## Speeds to Fly and Using Your Airspeed Indicator

The Wills Wing Hall Airspeed Indicator has been specially designed to help you fly your U2 at the proper speeds for optimum safety and performance, and is a recommended option for your glider.

There are four color coded bands on the ASI:

***White:*** This is the range from 18 m.p.h. to 28 m.p.h.. This is the normal thermalling speed range for light to moderate thermalling conditions. Try to keep your speed within this range when thermalling in light to moderate conditions. Very strong or turbulent conditions will warrant a faster flying speed.

***Green:*** The top of the green region represents the placarded maximum rough air and maximum maneuvering speeds. This speed of 46 m.p.h. should not be exceeded except in smooth air, and no abrupt large control deflections should be used above this speed. In significant turbulence it is recommended that you keep the airspeed "in the green" for best control and stability and best structural margin at all times.

***Yellow:*** This region represents the upper speed range between maximum rough air / maximum maneuvering speed and the speed never to exceed. You should fly in this range only in smooth air as described above.

***Red Line:*** This is your never to exceed speed. At no time should you fly faster than this speed.

---

*The design of the Hall type airspeed indicator involves using a ram air versus static pressure differential to raise a disc in a tapered tube against the force of the weight of the disc. Because of this the ASI has certain operating limitations:*

---

a. It is only accurate in one G flight. If you are turning at a bank angle of more than 30 degrees, the ASI will read artificially low as a result of the G loading of the turn. Reliance on the ASI for limiting airspeeds in high banked sustained spiral maneuvers will likely cause you to exceed the placarded speed limitations of the glider and will compromise your safety.

b. It is only accurate when within 15-20 degrees of the vertical orientation.

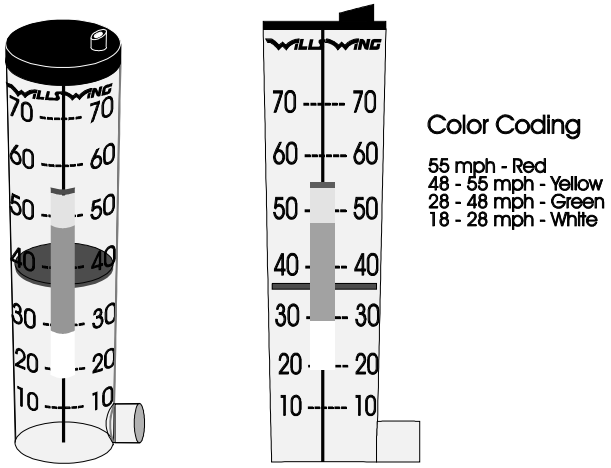

## Using the VG System

The U2 VG system uses a reduction system of pulleys both inside the sail behind the crossbar center, and also inside the right downtube. Tightening the VG increases the spanwise tension which the airframe places on the sail, reducing the spanwise twist and the sail elasticity. The result is an increase in L/D performance and a reduction in roll control authority and roll control response.

The VG is activated by pulling laterally on the VG rope and then moving the rope to set the rope in the V-cut knife cleat. The recommended procedure for increasing VG tension is to grasp the rope firmly at the cleat, and pull straight across the basetube.

VG full loose is for maximizing roll control authority and roll rate. Due to the slower trim and increased pitch pressures at VG full loose, you may find that total effective control is actually improved in some conditions at slightly tighter settings up to VG 1/4. VG settings between VG loose and VG 1/3 are recommended for working lift when any significant degree of turbulence is present, or when you are in proximity to terrain or other gliders.

Between VG full loose and VG one half, the glider retains good lateral control authority and response. Tighter than VG one half, the glider's roll pressures increase significantly and the roll rate becomes significantly slower. Tighter VG settings are recommended for straight line gliding, or for flying in smoother conditions when well clear of both the terrain and of other gliders. The stall characteristics of the U2 at tighter VG settings are more abrupt and less forgiving and the glider is more susceptible to spinning. Full breaking stalls and accelerated stalls at tighter VG settings are not recommended.

## Landing the U2

The following discussion assumes that you are executing the landing without the aid of a drag device such as a drogue chute. At the end of this section, we will discuss the use of drag inducing devices.

We recommend using an aircraft landing approach (45 entry leg, downwind leg, base leg, and final leg) whenever possible, and we suggest that you practice making your approaches with as much precision as possible. Under ideal conditions, landing approaches are best done so as to include a long straight final into the wind at a speed above best L/D speed. In a very limited field, or a field which slopes slightly downhill, when landing in light wind, you may need to make your final approach at a slower speed, perhaps as slow as minimum sink, in order to be able to land within the field. In winds of less than 5 mph, if the landing area slopes down hill at more than 12:1, you should seriously consider landing downwind and uphill; or crosswind, across the slope. Landing attempts which require slow speed approaches, maneuvering around obstacles or into a restricted area, or downwind or crosswind landings are not recommended for pilots below an advanced skill level.

### Standard Aircraft Approach Pattern

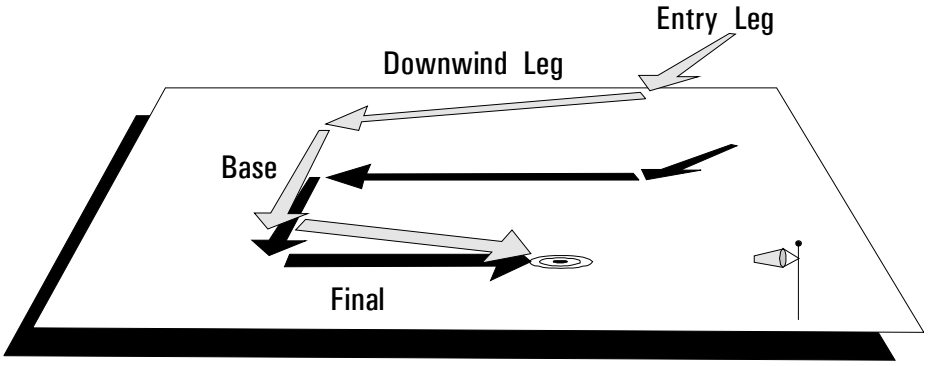


We recommend that you make your approach with the VG set between full loose and 1/3 on. A full loose VG setting will reduce glide performance, making it easier to land on a target or within a small field. It will also ensure maximum control authority during the approach, and especially when flying very slowly on final. At VG full loose, however, there is some loss of aerodynamic efficiency and flare authority, For this reason, in very light winds, at higher wing loadings or at higher density altitudes, it is recommended that a setting of VG 1/4 be used. A full loose VG setting will also increase the glider's roll sensitivity, and some pilots have had difficulty with roll / yaw oscillations on final. The best way to avoid this is to fly your entire approach at a constant airspeed, and to control your touchdown point by making adjustments to the shape of your pattern. You should choose your approach speed based on the amount of wind and turbulence present - in stronger wind and more turbulent air, fly faster. In strong wind when the air is stable, and you expect a strong gradient, or if obstacles indicate the likelihood of a wind shadow near the ground, fly faster. In any case, however, try to fly a constant airspeed throughout the approach. In particular, we recommend against the technique of make a diving turn onto final. This maneuver, sometimes called a "slipping turn" is often taught to student hang glider pilots as a way to lose altitude during the approach. While it will work reasonably well with low or medium performance low aspect ratio gliders which have high levels of yaw stability and damping, and which are able to lose energy by diving because of the large increase in drag at higher speeds, on a high performance glider this technique serves only to convert the energy

of altitude to energy of speed, while at the same time suddenly increasing the glider's sensitivity to control inputs. The result is a high probability of overshooting the intended landing point and the prospect of roll / yaw oscillations which may interfere with a proper landing.

Once established on a straight final approach, with wings level and flying directly into the wind, you should fly the glider down to where the basetube is between three and six feet off the ground. At this altitude, let the control bar out just enough to "round out" so that your descent is arrested and your flight path parallels the ground. The remainder of your approach will consist of bleeding off excess speed while paralleling the ground and keeping the wings level and the nose pointed in your direction of flight until it is time to "flare" for landing.

Prior to the landing flare your body position should be generally upright, but slightly inclined forward, with your head and shoulders forward of your hips and your legs and feet trailing slightly behind. Many pilots make the mistake of trying to get too upright at this stage of the landing, which actually reduces your flare authority and makes it harder to land on your feet. Your hands should be at shoulder width and shoulder height on the uprights. You should be relaxed, with a light grip on the bar, and your weight should be fully supported in your harness and not at all by your arms. (If your harness does not allow you to hang in the proper semi-upright landing position "hands off," without supporting your weight on the control bar, you will have a lot more difficulty making good landings. Talk to your harness manufacturer or your dealer about getting your harness adjusted to allow you to hang properly in the landing position.)

There are several options for when to make the transition from prone to this semi upright position. Some pilots favor going upright and moving both hands to the downtubes while still at altitude prior to the start of the approach. Others transition at the start of the approach to a semi upright position with one hand on a downtube and one hand on the basetube, and complete the transition by moving the other hand to the downtube just a few seconds prior to flare. Still others fly with both hands on the basetube until established on final glide, and then transition one hand at a time to the downtubes prior to flare.

Whichever method you use, there are a few important principles to observe. The first is that you should not make any change in hand position unless you are flying at or very near trim speed. At speeds faster than trim, you will be holding the bar in in pitch against substantial force, and if you let go to move your hand the glider will pitch up and roll towards your remaining hand. The second is that while moving either hand, you have no control over the glider. You should move only one hand at a time. Even so, if you can't make the transition in the position of each hand quickly and reliably, you should transition both hands while at altitude, before you start your approach. Otherwise, if you fail to make a quick transition, you could be out of control close to the ground, and suffer a turbulence induced change in heading or attitude without sufficient time to recover. Many pilots make the mistake of trying to change position while flying fast and close to the ground, and experience a dangerous loss of control as a result.  A third principle to observe is that if you are using a "pod" type harness, you should unzip and confirm that your legs are free to exit the harness at least 500 feet above the ground and before you start your approach. If there is any problem finding the zipper pull, or dealing with a stuck zipper, you don't want to have to try to fix that problem while also flying the approach.

Once established on a wings level short final, into the wind, body semi upright and with both hands on the downtubes, your final concern is the timing and execution of the landing flare. The goal is to arrive on the ground, on your feet, under control with the glider settling on your shoulders. If the wind

is 15 mph or more, you will not really execute a flare at all; you will simply slow to minimum flying speed, put a foot down, and step onto the ground. In lighter winds, you will want to use some combination of a final nose up flare, and running out your landing, in order to finish the flight on your feet with the glider settling on your shoulders. The lighter the wind, the stronger should be both your flare and your run.

The traditional method of landing in light or no wind calls for a sharp, aggressive flare at precisely the correct moment. This technique works fine when done correctly, but it's not easy to get the timing just right. Flare too early and you will climb, and then fall with the nose pitching down. Flare too late and you won't get the nose up enough to stop your forward motion, and the glider may nose into the ground as you run into it from behind.

The flare timing process is made much easier by using a combination of a "crescendo flare" and a run out of the landing. As you bleed off speed on final, flying just above the ground, you are at first letting the control bar out towards its trim position. As the glider reaches trim speed, which will normally be one to three mph above stall speed, you begin to gently push the bar out to keep the glider from settling. At this point it is almost time to flare. As the glider enters the "mushing" range of angles of attack, it will begin to settle in spite of your continuing to ease the bar out. This should be happening well before your arms are significantly extended. At this point begin your flare by smoothly accelerating the rate at which you push out on the bar. At the same time, draw one leg forward, put a foot down, and start to run as hard as you can. This run should be very much like an aggressive take off run – your body should be leaning forward into the run and you should be driving with your legs. The difference here is that while you are leaning into your run and driving forward with your legs, your arms are extending fully from your shoulders, pushing out, and what feels like upwards, on the control bar in an accelerating, "crescendo" flare.

Done correctly, this type of flare / run combination will bring the glider quickly to a very nose high attitude, producing a great deal of drag and quickly arresting all of your forward motion. You will feel the glider pulling you from behind, resisting your attempt to run, and as you slow down the glider will settle gently on your shoulders. Even in no wind, you should not have to take more than a few steps. If your timing is a little early, and you feel the glider start to climb, simply stop pushing out and resume the flare when the glider again begins to settle. If your timing is a little late, your feet will touch down a little sooner, but as long as you're running and flaring at the same time, the glider will stay over your head or behind you.

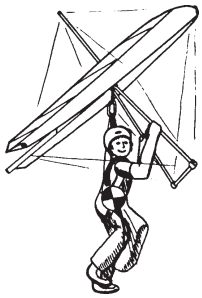

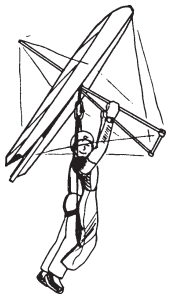

Note: Pilots who have trouble with the flare, and with the glider nosing over during landing, usually do so because of one of the following problems:

a. Harness leg straps too long / hanging too low below the glider, and / or hands too low on the control bar. This reduces pitch authority and prevents an adequate flare.

b. Improper body position - pilot leaning back, (away from the anticipated hard landing), with feet extended in front. This moves the pilot's center of mass forward ahead of his shoulders, effectively shortening the pilot's arms and reducing flare authority. The proper position is with the pilot's body inclined forward, with the shoulders out ahead of the pilot's center of mass. Thinking about pushing "up" instead of "out" when flaring may help you to maintain the proper forward inclined body position.

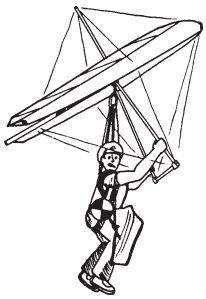

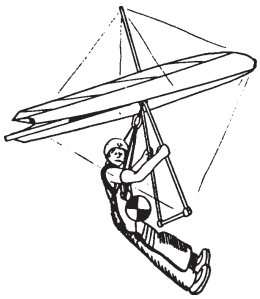

c. Slowing too much prior to flare, so that your arms are too extended to allow enough flare amplitude.

## Using drag devices during landing

It is becoming more popular on high performance gliders for pilots to utilize a small parachute or "drogue chute" during landing approach. The proper function of such a device is to increase drag on the glider, and as a result reduce the glide ratio. Please note that a drogue chute, because it produces only drag and not lift, does not "slow the glider down" or allow it fly at a slower speed, or reduce the landing speed. What it does do is to allow the pilot to fly a steeper approach at a higher speed, have much less "float" after round out, and thus make it much easier for the pilot to plan his approach, to time the flare, and to accurately "hit the spot" and land close to the intended landing point. It restores the ability, which used to be present on lower performing gliders, to use adjustments in speed to control the steepness of the descent.

Drogue chutes have been used which attach to the glider, and others have been used which attach directly to the pilot's harness. There are several significant dangers in using a drogue chute. One pilot died when he deployed a drogue chute over the bottom side wire, and the glider was pulled into a fatal spiral dive. A drogue chute attached to the pilot's harness can, if it becomes caught on the keel or on a batten at the trailing edge, interfere in a dangerous way with the pilot's control of the glider. A drogue chute which is unstable, or does not remain inflated, can create distractions for the pilot which interfere with his safe operation of the glider.

Wills Wing manufactures a drogue chute that attaches to the pilot's harness on one side, and deploys and flies off to one side behind the pilot attached to a very short bridle that keeps it inside the keel and the trailing edge of the sail. This configuration minimizes the prospect of entanglement of the chute with the glider.

When using a drogue chute, we recommend that you deploy it early, before you begin your approach. Deploying the drogue will effectively change the performance polar of your glider - the glide ratio will be reduced at all speeds, and it will be reduced more and more as you fly faster and faster. As a result, proper approach technique will include setting up a normal approach, but at a significantly steeper approach angle in all phases of the approach. In other words, you will be higher, and on a steeper angle of descent, at every point during the approach. You should also err on the high side

when in doubt, because with the drogue chute you have limited ability to extend (flatten) your glide, but very good ability to reduce (steepen) it. For example, in the normal glider configuration, if you were approaching at best L/D speed into a head wind, and were coming up short, you would speed up. With the drogue, speeding up will primarily degrade your glide and will not get you significantly more distance. When using the drogue, set up higher, and approach with more speed. Then, if you are too high, you can still speed up more and cut your glide, while if you are too low, you can slow down and extend your glide. When you round out on short final and begin slowing down, the drogue will shorten the time period between round out and flare. This reduces the opportunity that turbulence would otherwise have to lift a wing or yaw the nose away from your flight direction. As a result, timing the flare becomes easier, and the chances of making a wings level flare with the glider pointed in the direction of flight are increased. Overall, the effect is very much that of making the glider take on the landing characteristics of a lower performance, easier to fly glider.

The first time you use a drogue chute you should fly over the LZ at more than 1000' AGL, and deploy it long before you start the landing approach. This will allow you to take the time to learn how the glider flies with the drogue. A properly designed and mounted drogue chute should not have any major effect on the glider's flight characteristics, other than to reduce the glide ratio, but you should get a feel for these effects at altitude.

# U2 Breakdown

Breakdown of the glider is essentially the reverse of assembly.

1. Unzip the sprog access zippers all the way to the leading edge end of the zippers. This should be your first step when you break down. If the sprog zippers are not unzipped fully when you remove the battens, the sail may catch on the end of the sprog and damage the sail or the zipper.
2. Set the VG to the full loose position. This is important - if the VG rope is set in the cleat at anything other than the full loose position, the rope will go tight and be damaged when you fold the wings in. For extra insurance, pull the rope entirely through the cleat to the outside of the cleat.
3. Remove the nosecone and put aside. Remove any instruments. Detach the bottom front wires at the noseplate. You will need to push up on the button lock to allow the tang to disengage from the collar.

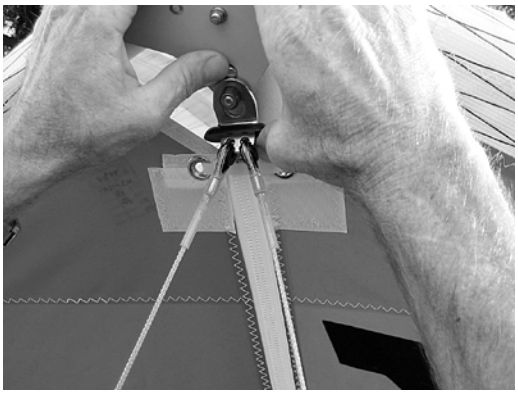

4. Remove all but the three longest cambered battens from each wing. On lever tip equipped battens, remember to apply slight downward pressure on the top of the lever while squeezing the bottom portion so as to release the locking catch before pivoting the lever tip upwards.
5. Open the tip wand cam lever velcro closure, and pull on the string attached to the end of the lever to "un-cam" the lever and straighten the tip wand. Install the tip bag over the wand and tip of the sail at this time.
6. Disengage the top rear wire, and de-tension the crossbar sweep wire and let the wings fold in slightly. (To release the tangs, depress the rear button on the button lock system, which will also depress the front button and allow you to disengage the tangs from the keyhole collar.) Re-install the neoprene protective socks over the rear wire junction bolt and the rear end of the keel. Remove the remaining top surface battens and the bottom surface battens at this time.
7. Swing each wing in about 1/3 of the way. At each wingtip, remove the tip cover bag. Holding the tip wand in one hand, pull straight aft on the cam lever and disengage the cup from the end of the wand. Remove the tip wand by pulling straight aft from the end of the leading edge. Rotate the lever inside the sail.

8. Fold the wings all the way in to the keel pulling the sail over the top of the leading edges. At this time you should be able to dismount the front ends of the root battens from the top of the keel. Lift up on the battens to disengage them from the studs, and then pull the tips clear of the studs and pull the battens partly out of the pockets.

9. Fold the sprogs against the leading edge so that they overlap, with the outboard sprog underneath. (The outboard sprog folds towards the nose, and the inboard sprog folds towards the tip.) Make sure the sprog zippers are fully open. The sprogs remain outside the sail when the glider is packed up.

10. Pull the sail out away from the keel until it is even on top and bottom. Place the bottom surface battens and tip wands on the sail and roll the sail gently and carefully, parallel to the trailing edge of the outboard portion of the sail. Install a velcro sail tie on each wing just behind the trailing edge at the root.

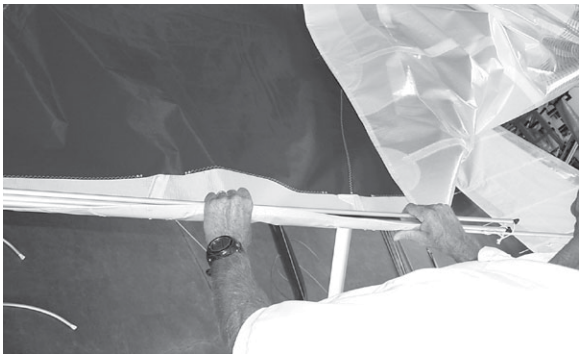

---

*Try to roll the sail in such a way that the leading edge portion remains as smooth as possible. Do not attempt to stuff the sail between the mylar pocket and the leading edge tube at any point where you feel resistance, and do not attach the velcro ties so tight so as to induce creases in the mylar or leading edge sail material. Note that the leading edge panel of the sail extends behind the end of the mylar insert - roll the sail in this area so as to avoid creasing the leading edge panel at the rear of the mylar insert - see the photo below.*

---

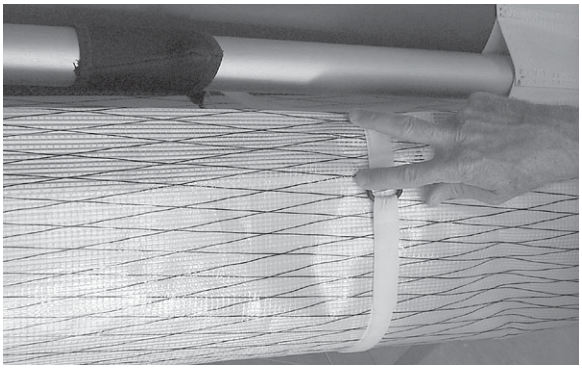

11. At the wingtips, lay the sail at the tip out flat, disengage the elastic retainer from the outboard end of the outboard transverse batten, and pull the batten out of the pocket far enough so as to allow the tip of the sail to be folded forward at a point even with the end of the leading edge tube.Fold the wingtip forward over onto the bottom  surface of the sail. Working from the trailing edge, roll the sail tightly to the leading edge, and install the tip cover bag. Note: If you're breaking down in a dirty, rocky and/or abrasive area, you can combine this step with step 7 above, by pivoting the wing inwards enough to allow you to flip the sail at the tip over the top of the leading edge, fold forward and roll up the wing tip and put it in the tip cover bag.

12. Finish rolling the sail in the area of the sprogs, and install the other sail velcro ties at this point.

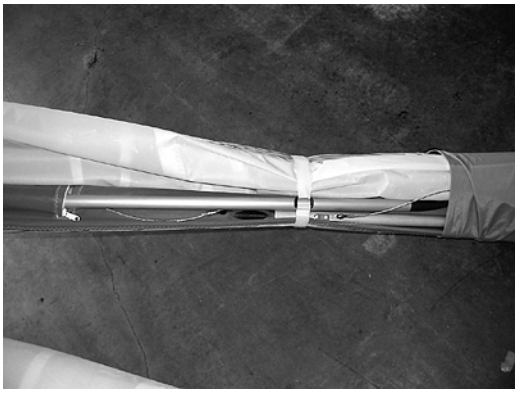

13. Install the long, wide sail velcro around the sail forward of the control bar apex, and stow the nosecone under this velcro.

14. Install the glider bag. Flip the glider over onto the ground. Remove both control bar corner ball lock pins and stow them in the downtube end plugs. Pull the VG rope through to the outside of the cleat and remove the basetube and set it aside.

15. Fold the control bar dowtubes together, lay them down against the keel and install the control bar bag. Place the basetube in the rear end of the glider bag with one end of the basetube lying between the tip bags at the end of the glider bag.

16. Put the battens in the batten bag and stow the bag just forward of the basetube, with the open end of the batten bag adjacent to the end of the basetube. Slide the end of the batten bag over the end of the basetube to protect the sail from the basetube end hardware. Each end of the basetube should now be isolated from the sail. Zip up the glider bag.

## U2 Stability Systems

Several design features of the U2 determine the glider's degree of stability in pitch:

a. The combination of wing sweep and spanwise twist.

b. Reflex in the root section, the degree of which is determined by the lengths and hole locations of the keel, the control bar and front to rear bottom wires, and by the shape of the root battens.

c. The alignment of the sprogs, and the height at which they and the transverse battens support the trailing edge.

d. The shape of the preformed battens and the internal fabric ribs, and adjustment of the internal velcro attachments which define the airfoil.

e. The setting of the tip wands.

Correct attachment and proper adjustment of the sprogs are critical to providing adequate stability at low angles of attack, particularly those below the normal operating range.

## U2 Sprog Adjustment and Flight Testing

The U2 uses two internal sprogs per side in combination with one transverse batten on each sprog. Each transverse batten spans two top surface battens, so a total of eight top surface battens are supported. The sprog system is the primary component of the system which provides pitch stability. The function of the system is to support the trailing edge of the sail at low angles of attack, and thus provide a nose up pitching moment. The sprogs are adjusted at the factory to their proper settings. You can check this adjustment as follows:

### Sprog measurement

1. Fully set up glider on a reasonably level surface and set the VG to full tight.
2. Place two equal supports, about 30" tall, under the rear end of each leading edge tube, so as to lift the keel off the ground and take up any slack in the bottom side wires. Make sure that the support touches only the leading edge tube, and does not in any way contact or influence the tip wand or the sail bottom surface behind the leading edge.
3. Tie a lightweight thread tightly across wing from the inner of the two supported battens on each sprog to the corresponding batten on the other wing. (These are the #3 and #5 battens, counting the shortest cambered tip batten as the #2 batten).
4. Press firmly on the top of the sail at the center of the transverse batten at the end of each sprog and then release. Measure the height of each thread relative to the top of the keel tube. The results should be as follows:

| | Outer Sprog Thread | Inner Sprog Thread |
|---|---|---|
| U2 160 | at least 3.5" (89mm) above keel | at least 1.0" (25mm) above keel |
| U2 145 | at least 4.875" (124mm) above keel | at least 1.625" (41mm) above keel |

5. Note that this method will not disclose sprogs that are assymetric. If, after achieving the proper measurement, you have a turn in the glider which is only present at tighter VG settings, lower the sprog on the side the glider is turning towards, and raise the other sprog by the same amount.

## Method of adjustment

1. To adjust the sprog height, fully unzip the access zipper to gain access to the front of the sprog where it is mounted to the sprog bracket. (Note: The procedure described herein is most easily done with the battens removed and the wings folded.)

2. Remove the horizontal bolt and nut which secures the sprog clevis fork to the pillar block, taking care to maintain the rotational alignment of the clevis fork in the sprog at its original setting.

3. To raise the sprog, turn the clevis fork so as to "loosen" or unscrew the fork in the end of the sprog, thereby lengthening the sprog. To lower the sprog, turn the clevis fork in the opposite direction. One full turn raises or lowers the sprog about one half inch. The adjuster may be locked in place with a thin jam nut, in which case you will need to loosen this jam nut before you can turn the clevis fork.

   You can usually loosen the jam nut by rotating the sprog counter clockwise before dismounting it, and then spin the nut out of the way until you have re-adjusted the clevis fork as desired. When you have achieved the desired adjustment, run the nut against the end of the sprog, loosen the clevis fork a quarter turn, and snug the nut finger tight against the sprog. After you re-attach the clevis fork to the pillar block, while holding the nut, rotate the sprog 1/4 turn in the correct direction so as to tighten the nut. Note that the jam nut is primarily to preserve the sprog adjustment if the sprog or sprog cable is detached. With the sprog and cable fully installed and attached, the adjustment cannot change.

4. Re-attach the sprog clevis fork to the pillar block. Note: DO NOT overtighten the bolt which secures the clevis fork to the sprog pillar. The fork should not be compressed against the pillar, and must be completely free to pivot on the pillar. With the glider fully set-up, press down firmly on the rear end of the sprog to seat the cable before checking the measurement again.

Note that the outboard sprogs should always be adjusted slightly higher than the inboard sprogs.

### Test flight

If the sprogs are set too low, it may cause a significant increase in trim speed and a reduction in pitch pressures at tighter VG settings, and there will be a reduction in pitch stability at angles of attack below normal flight. This stability reduction could increase the probability of a turbulence induced tumble or other in-flight stability related loss of control. If the sprogs are set too high, it may cause excessive pitch bar pressure at high speeds, and excessive roll control pressures, lag in roll response, and adverse yaw. Please be aware that flight testing encompasses a very limited angle of attack range and that pitch stability in the flight test envelope does not necessarily correlate to pitch stability in the extended angle of attack range that is investigated on a test vehicle. In particular, do not assume that adequate stability is only contingent on positive pitch pressure during flight testing. However, in the case of the U2, insufficient pitch pressure in steady state flight with pilot full forward is a significant indicator that the sprogs are set too low. If, while maintaining steady state flight in smooth air at VG full tight, with the bar pulled all the way in, you experience less than five lbs (2kg) per hand of positive pitch pressure, you should check and re-adjust your sprogs as necessary.

*In order to perform the above test it may be necessary to exceed the maximum placarded VNE of the aircraft. This test is best performed by a qualified test pilot, and, in any case, should be performed only in smooth air and with caution.*

## Maintenance

This section contains a recommended schedule of periodic maintenance. None of the items in this section are a substitute for the continual and consistent practice of proper pre-flight inspections and immediate maintenance of any items on the glider which require it. Safety requires that your glider be fully airworthy for every flight. Nuts and bolts must always be secure, safeties must always be in place, and damage to any part which could compromise the airworthiness of the glider cannot be tolerated. If you have a question about the need to repair or replace some part of your glider, feel free to contact your dealer or Wills Wing directly. It is not always obvious which items require attention and which may not. Minor dents or dings in a non critical location on an airframe tube may not require any repair or maintenance. On the other hand, a wire that has been kinked one time can fail very quickly after that, and should be replaced immediately. A control bar corner fitting that has had a significant landing impact may have a crack that is almost undetectable, but which could cause the part to fail catastrophically at a later time.

We recommend that you have all maintenance work done by your Wills Wing dealer.

## Parts Ordering and Parts Replacement

Wills Wing policy requires, for safety reasons, that replacement parts be ordered through an authorized Wills Wing dealer. The purpose of this policy is to insure that the parts will be delivered to someone who has the required expertise to install the parts properly. We have seen multiple examples of incidents in which a pilot's life was endangered as a result of the incorrect installation of replacement parts, or incorrect assembly of a glider.

The serial number of the glider is required when ordering any fabricated replacement part. The serial number is a five digit number which can be found in several places on the glider; on an embossed label on the bottom of the front of the keel tube, on the operating limitations placard on the bottom of the rear of the keel, and written inside the nose area of the sail. In addition to the serial number, you should provide any relevant information regarding configuration options for the glider in question.

When replacing a part on the glider, always compare the old part with the new part to make sure that the new part appears to be the correct item. If you have any question, contact Wills Wing. Also, be sure to do a thorough inspection of the glider after the installation of the part, to insure that the part has been installed correctly, and appears to be functioning correctly, and that the rest of the glider is properly assembled.

### Every Six Months

1. Check the adjustment of your sprogs, as described in the last section.
2. Check your battens on a flat level floor against the batten diagram provided, and correct any that deviate from the pattern by more than 1/4".
3. If you fly in a dusty or sandy environment, it will help to prolong the life of your batten pockets if you wipe each batten with a rag before you install it in the sail.
4. Inspect all cables and suspension system components, and replace any suspension system component that shows any wear, and any cable that shows any kinks, wear, damage, corrosion, etc. Replace any structural cables that are less than 3/32 diameter.
5. Inspect all bolts for tightness, all safeties for proper installation and possible damage. Inspect plates and fittings for damage, holes in tubes for elongation. Inspect the ball lock pins for any sign of damage or wear and replace the pins if damage or wear is found. Inspect the keyhole tang button locking mechanisms at the nose and rear keel for proper operation - adjust or replace as necessary if the button locks do not operate smoothly and engage fully.
6. Inspect the sail for wear, tears, UV damage, loose stitching, etc.
7. Check for free operation of all pulleys. Disassemble, clean and / or lubricate or replace as necessary. Inspect all VG ropes for wear or damage and replace if necessary.
8. Lightly spray any zippers on the glider that show indication of excess friction with silicone spray lubricant. Do not use any other type of lubricant. Wipe off any excess silicone so that it does not attract dirt.
9. Inspect the sprogs, sprog hardware and sprog cables. If the sprogs have been loaded heavily, it is possible that the sprog tubes may have been bent, and the cables may have been stretched.

The normal sprog cable lengths are shown below. Any cable which exceeds this measurement by more than 1/16" should be replaced.

U2 160: Inner Sprog Wire 25.3" Outer Sprog Wire 21.2" (Rear tang rivet center to center of LE mounting bolt).

U2 145: Inner Sprog Wire 26.7" Outer Sprog Wire 21.1" (Rear tang rivet center to center of LE mounting bolt).

There are three hinge mechanisms in each sprog assembly that must be free to swivel. One is the cable attachment to the leading edge. Make sure the cable can swivel in the horizontal plane at this attachment. Also make sure that the locknut is fully engaged and secure on the bolt. Second is the junction of the sprog fork and sprog pillar. This junction should be disassembled, cleaned and lightly lubricated with white grease. When re-assembling, take care not to overtighten the nut, as there should be no clamping effect of the sprog fork on the pillar. Third is the junction of the pillar and the sprog bracket attached to the leading edge. Service this junction in the same manner, and again, do not overtighten the nut.

## Every Year

In addition to the normal six month service items, also perform the following:

1. Remove the sail completely from the frame, and disassemble all frame components. Inspect every part of the glider for any damage or wear. Inspect the tubes for straightness, dents, cracks, and for signs of corrosion. Inspect each hole or slot in each tube for elongation, cracks, wear, loose bushings, or other signs of damage.
2. Anytime you have the sail off the frame, turn the sail inside out through the bottom surface center zipper and inspect all of the batten pockets and batten pocket terminations.
3. Replace bottom side wires and hang loops. Note: The bottom side wires are retained by a lightly press fit bushing. This bushing is best removed with a special stepped drift, by pushing it out of the fitting from the rear. Take care not to damage the fitting.
4. Replace the VG ropes.
5. Remove the transverse battens and inspect for damage.

## Special circumstances

1. Any time you suffer a crash or extremely hard landing you should have an “annual” inspection done on your glider to insure that you find all damaged parts. Following any hard landing, be sure to inspect the apex hardware, the control bar legs and basetube, and all control bar fittings and fasteners for damage, including the ball lock pins. Any time you replace a control bar leg or basetube, you must carefully inspect all related fittings and replace any that are bent or damaged.

   Hard landings may also impose very high loads on the sprog assemblys and transverse battens. Inspect accordingly.
2. If your glider is ever exposed to salt water you will need to have the glider completely disassembled in accordance with the recommended annual inspection procedure. All frame parts will need to be disassembled, including the removal of all sleeves and bushings, flushed liberally with

fresh water, dried completely, and treated for corrosion inhibition with LPS-3 or other suitable agent.

3. Cleaning Your Sail - Keeping your sail clean will extend the life of the cloth. When cleaning the entire sail you should generally use only water and a soft brush. You may clean small spots or stains with any commercial spot remover that is labeled for use on polyester. Such cleaning agents are available at the supermarket or drug store, or you may order a cleaning solution from Wills Wing through your dealer.

## A note about cables and cable maintenance

The cables which support the glider's airframe are critical components of the glider's structure, and must be maintained in an air worthy condition. It is a general practice in the design of aircraft structures to design to an ultimate strength of 1.5 times the highest expected load in normal service. Hang glider cables, like other structural components on the glider, are typically designed with a structural safety factor of only about 50% above the expected maximum load. No significant loss in cable strength can be tolerated.

A cable with even a single broken strand must be replaced before the glider is flown again. A cable which has been bent sharply enough to have taken a permanent set (will not lie flat in a straight line when all tension is removed) must also be replaced immediately. If it is not, subsequent tensioning and de-tensioning of the cable will induce fatigue, and the cable will fail. In tests we have conducted, a cable bent one time to 90 degrees, and then loaded to the equivalent of a normal flight load 100 times (corresponding to 100 or fewer flights), failed at only 56% of its original strength.

Some degree of fatigue due to repeated bending of cables is almost unavoidable in an aircraft that is assembled and disassembled with every flight. Bottom side wires are subject to the highest loads in flight, and are therefore the most critical. This is why we recommend that these wires be replaced annually, even if there is no known damage. The requirement for immediate replacement of a cable known to have been bent or otherwise damaged supercedes this annual replacement requirement.

Replacement cables should always be obtained from the factory, or, if not from the factory, from a reliable source known to use proper fabrication procedures. An improperly made cable may appear perfectly OK on visual inspection, but could fail in flight at a load much below the intended design strength of the cable.

# Removing the Sail from the Airframe and Re-Installing

Many maintenance and repair procedures will require the removal of the sail from the frame. Please follow these instructions when removing and reinstalling the sail. Please read all the instructions for each operation before beginning.

## Sail removal

You will need an unobstructed area six feet by thirty feet. Make sure the surface is clean. If it is abrasive, like rough concrete, you should either put down a protective tarp or be extremely careful not to scrape your sail.

1. Lay the glider on its back, unzip and remove the glider bag and put the battens aside. Remove the control bar bag.
2. Remove the screws which mount the sail at the front of the leading edges. Remove the webbing zipper stop at the bottom nose area. Completely unzip and separate the bottom surface zipper.
3. Spread the wings slightly. Dismount the sail from the rear leading edges by removing the clevis pin located five inches forward of the rear of the leading edge tube. Remove the pin from the sail anchor strap and re-install it in the leading edge.
4. Remove the rear leading edges, and the inboard sprogs from the glider. (see the section on "Breaking Down The Rear Leading Edges" at the beginning of this manual).
5. Unbolt the bottom side wires and top side wires from the crossbar and feed them through the holes and out of the sail. Unbolt the bottom rear flying wires from the rear keel. Reassemble the hardware removed onto the bolts in the original order so that it doesn't get lost. All disassembled assemblies on the glider must be reassembled in the proper order and orientation. Use the exploded parts diagrams in this manual to help you.
7. Unbolt the kingpost from the keel, and detach the top front wire from the kingpost.
8. Undo the velcro which holds the front part of the keel pocket together. Slide the frame out through the open center zipper. If you encounter resistance, stop and find out what is hanging up.
9. If you need to send the sail in to the factory for repair, remove the mylar and the transverse battens. The mylar is removed from the front end of the mylar pocket. It helps to secure the opposite end of the sail to something solid, so that you can lay the leading edge out straight and pull the mylar straight out of the pocket. If you have trouble getting it to slide out freely, it is probably because the edge of the mylar has worked its way into the seam and gotten stuck on the adhesive seamstick tape. Work your way up and down the leading edge pocket rolling the mylar away from the seam until it is free along its entire length.
10. Fold and package the sail carefully if you plan to ship it in for repair. Be sure to include written instructions of what you want done, your name and a phone number where you can be reached during the day.

## Re-installing the sail on the frame

1. Install the mylar in the sail. Make sure you install it right side up; the slit edge is at the front and on the bottom. The easiest way to install the mylar is to push it into the pocket using a long lofting batten attached to the end of the mylar insert which is first inserted in the pocket. A small diam-

eter pin on the end of the lofting batten placed through a small hole in the end of the mylar insert allows you to push the mylar into the sail and remove the batten while leaving the mylar in place. You will have to stop from time to time to make sure the mylar is properly lying flat in the pocket. Do not push the mylar too far into the pocket. Make sure there are no folds in the mylar, especially at the tips. Make sure the mylar wraps in the proper direction to follow the sail around the leading edge as it enters the pocket.

2. Install the transverse battens in the sail.
3. Position the sail on the floor with the keel pocket up and the wings folded over so that the leading edges lie along the length of the root line, with the mylar pockets lying on top.
4. The frame is most easily inserted without the rear leading edges installed, and without the inboard sprogs attached.
5. Position the frame with the bottom of the noseplate facing up and with the rear end of the leading edges at the nose of the sail. Slide the frame into the sail through the open bottom surface zipper, making sure that the leading edges of the frame pass properly into the leading edge pockets of the sail and don't get caught at the rear of the bottom surface near the root. As you feed the frame slowly into the sail, check periodically to see that none of the hardware is snagging on the sail or internal sail ribs.
6. After the frame is fully installed, mount the webbing anchor strap to the rear leading edge with the clevis pin located 5" from the end of the leading edge. Make sure the strap is properly oriented on the bottom of the leading edge tube (which is on top with the glider upside down) and that the strap is not wrapped around the tube. (See the section at the beginning of the manual about re-assembly after shipping.)
7. Reconnect the bottom surface center zipper at the nose, zip part way up, and install a new securing zip tie at the nose.
8. Install the rear leading edges and inboard sprogs (see the section on re-installing the rear leading edges after shipping at the beginning of this manual.)
10. Install the screws to mount the sail to the front of the leading edges.
11. Insert the top and bottom side wires into the sail and attach to the crossbar, making sure that no cable is wrapped around a leading edge or crossbar, and that no thimbles are cocked or twisted. Pull the top front wire out through the hole in the sail.
12. Bolt the bottom rear wires and sail retainer webbing strap to the rear of the keel.
13. Feed the sweep wire through the keel pocket.
14. Flip the glider up onto the control bar. Mount the kingpost to the keel, and attach the top front wire to the kingpost.
15. Spread the wings slowly and carefully, making sure that the sail rides forward as necessary at the nose without catching. ***Be careful: you can easily tear the sail open at the nose at this point.***
16. Finish the assembly of the glider completely according to normal assembly procedures.
17. Do a very careful and complete preflight of the glider according to the normal preflight procedure as explained earlier in this manual.

# Glider Tuning

## CG adjustment

This has already been covered in the section of this manual on using your wing tufts. Wills Wing recommends that tuning other than CG adjustment be performed by your Wills Wing dealer.

## Turn trim

Turns are caused by an asymmetry in the glider. If you have a turn, first try to make the glider symmetrical in every way. If a turn only appears at VG settings of 3/4 to full tight, it may be an indication that the sprogs are set assymetically.  See the section below on tip wand receptacles.

## Airframe

Check the leading edges for possible bent tubes. Check that the keel is not bent to one side.

Check for symmetrical twist in the leading edges by checking for symmetry in the alignment of tip wand receptacles.

## Battens

Check the battens for symmetrical shape.

## Tip Wand Receptacles - rotational alignment

The plastic plug which fits directly into the rear leading edge determines the rotational alignment of the tip wand. This plug is secured against rotation by a small screw in the end of the leading edge. There are five holes in the plastic cap, allowing for two notches of rotational adjustment on either side of the normal, center hole. Prior to removing the securing screw, note the position of the scribe mark on the cap relative to the screw. If they are not exactly aligned, use a sharp knife or other object to scribe a reference line on the rear leading edge that lines up with the scribe mark on the cap. This will mark your starting point. Remove the securing screw and rotate the cap to see where in the five hole range of adjustment the cap has been initially set.

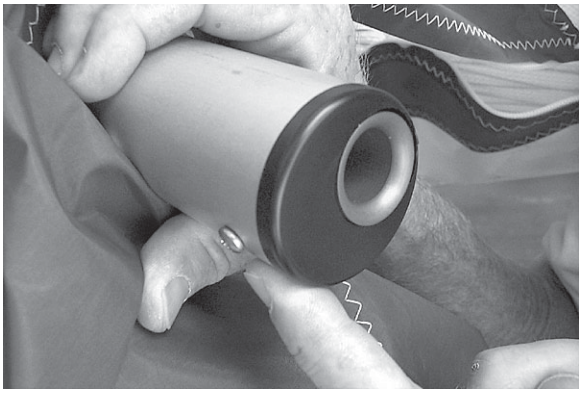

## Sail tension

Check for symmetrical sail tension on the leading edges. In order to check this, sight the hem of the sail at the bottom of the leading edge tube relative to the noseplate on each side. Leading edge sail

tension is adjusted by changing the mounting hole where the tip wand cam lever mounts to the sail (1/4" adjustments are available) or by shortening the tip wands. A one eighth of an inch difference (3mm) in the length of the tip wand can make a noticeable difference in how a glider handles. If you have a glider that is a little too stiff, you might try shortening the wands by an eighth inch.

You should also check the relationship between the tension is the sail mount strap at the aft end of the leading edge, and the tension as taken by the tip wand. With the glider fully assembled, and the VG set to full loose, the sail mount webbing strap at the rear end of the leading edge should be snug, but not overly tight, and it should be symmetrical from side to side. It should then become progressively tighter as the VG is engaged.

## Twisting a tip

After you have made everything symmetrical, if you still have a turn, you can correct it by rotating one or both tip wand receptacle end caps. A left turn is corrected by twisting the left sail plug counter clockwise (twisting the tip wand down) or twisting the right sail plug counter clockwise (twisting the tip wand up) or both. Twist clockwise on either or both plugs to correct a right turn. Note that the mechanism of adjusting the sail wand receptacle for tuning out a turn in the glider is the same as performing the same tuning function on a conventional tip, although the direction of rotation seems to be opposite. For example, to remove a right turn, if working with the right wing tip, you would rotate the end cap clockwise, so as to rotate the wand down, thus depressing the right wing tip. On a conventional wingtip, you would rotate the end cap counter clockwise, because doing so would rotate the wingtip downwards. The aerodynamic effect is the same, even though the direction of rotation appears at first glance to be opposite. Adjustments are best made in one "notch" increments. If you have rotated the right wing down both available notches, and still have a right turn, you can rotate the left wing up.

To rotate the tip wand receptacle end cap, follow the procedure previously described for checking the alignment.

## Batten tension

The outboard most battens on each side (2 on each side on gliders with spring battens, one each side on gliders with lever battens), are tensioned by looping the batten string over the notched end of the batten twice. The remaining battens are all fitted with either spring tips or lever tips. The outboard batten with strings should be adjusted quite tight for maximum sail cleanliness. The spring batten tips will automatically set their own proper tension if they are the correct overall length. To check for proper adjustment, with the battens installed and the glider fully set up, the "gap" or remaining travel in the spring batten tip between the shoulder of the batten and the end of the aluminum portion should be between 3/8" and 9/16" (9mm and 14mm). If this gap is shorter than this range, it will be very difficult to install the battens. If it is larger, the battens will be too loose. If you have battens that are too tight, you may find it easiest to correct by shaving an eighth of an inch (3mm) or so from either the front or rear tip of the batten. This can be done by cutting an 1/8" off the end of the tip with diagonal wire cutters, and then dressing the end with medium sand paper. On battens fitted with lever tips, it is important to adjust the lever tips to set the right batten tension. The lever action makes it easy to have the battens set too tight. Batten tension is best judged by noting at what point the batten begins to tension the sail as you pivot the lever tip down into its locked position. This is the point at which chordwise slackness begins to be pulled out of the sail, the high point of the batten begins to make a prominent ridge in the top surface, and a noticeable increase in resistance is felt in pivoting the

tip downwards. On any battens inboard of the crossbar junction, this point should not come until the lever tip is within no more than the last 20 to 30 degrees of travel before becomong straight. On battens outboard of the crossbar junction, this point should come when the lever is between 30 and 40 degrees of straight. To lengthen the batten, simply unscrew the batten tip shank from the batten, to shorten the batten screw the tip further in. Each three turns changes the length of the batten by 1/8 of an inch.

## Car Top Mounting and Transport

Improper or careless transport of your glider can cause significant damage. You should transport your glider on a rack which has at least three support points which span at least 13' of the length of the glider. These should be well padded and at least four inches wide to distribute the load. Your glider should be securely tied down with webbing straps which are at least 1/2" wide, but not tied so tightly or with such a small diameter rope that the mylar insert is permanently deformed. If you drive on rough roads where the glider receives impact loads, you should take extra care to pad your glider internally when you pack it up. Note that we specifically recommend against transporting your glider inside of a tube or box, unless the glider rests on a padded surface and is secured against movement. We have seen many examples of gliders inside of tubes that underwent highly accelerated wear due to the continuous movement of the glider in the tube when driving over normal bumps in the road surface.

## In Closing - A Few Final Words on Your Safety

With proper care and maintenance, your glider will retain a high level of airworthiness for some years. Because of the relatively short history of hang gliding, and the rapid advances in new designs, we do not have a lot of information about the ultimate service life of a hang glider. We do know that ultra-violet (UV) damage to the sail from sunlight is one limiting factor in the life of your sail. Try to avoid exposing your sail to sunlight any time you are not actually flying it. We also know that sails will both stretch and shrink over the life of the glider, and that because of these dimensional changes in the sail the glider's flight characteristics can change with time. The most common manifestation of this is that a glider's trim speed often tends to slow down as the glider ages. At some point it may no longer be possible to trim the glider at a speed above stall. Because the changes that cause this are changes to the shape of the sail, there may not be any tuning adjustments that can return the glider to it's original flight characteristics. A glider which, because of the natural effects of aging, cannot be tuned so as to exhibit acceptable flight characteristics, performance, and stability, should be retired.

We also know that there are forces in nature that can be so violent that they can result in fatal accidents regardless of the airworthiness of your aircraft. Weather can change rapidly and even on a day on which the weather seems fairly constant, manifestations of micro - meteorology, like turbulence have a statistical nature. On a day where the average peak lift in thermals is five hundred feet per minute, there is a non-zero probability of encountering air that is much stronger than that, and may be strong enough to overwhelm your control of the glider. Ultimately your safety is your responsibility. Know the limitations of your knowledge, skill and experience, and know the limitations of your aircraft. Fly within those limitations.

Analysis of accidents across the whole spectrum of aviation shows that most accidents are caused by avoidable errors in pilot decision making. The quality of your decisions as a pilot is the single most important determining factor in your safety. In light of this, it becomes illustrative to ask the question, “why do pilots make bad decisions that lead to accidents?” This is a complex question. For a more detailed treatment of it, we invite you to read the article “Why Can’t We Get A Handle On This Safety Thing” published in the September 1998 issue of Hang Gliding Magazine, and also published on our web site at www.willswing.com. In brief, one answer to the question of why pilots make bad decisions seems to be that pilots are rewarded and reinforced for making bad decisions. This happens because most bad decisions do not result in an accident, and therefore they appear to the pilot to be good decisions. If they don’t result in an accident, how do we know they’re bad decisions? Think of it this way: in any decision you make; Do I fly today? (are these conditions within my abilities?), Is the glider well enough balanced for me to start my launch run?, Do I have enough room to turn back into the hill in this thermal?, Can I continue to drift over the back in this weakening lift and still glide back above the ridge top and avoid the rotor?, - there is a percentage of certainty involved. If you make decisions at the 99% level of certainty, the vast majority will be “rewarded” as good decisions. However, if they’re only 99%, they are really bad decisions, because in one out of 100, you will be wrong. Since the consequences of being wrong can be as serious as a fatal accident, any decision that can be wrong is a bad decision. The logical conclusion of this analysis of safety is that most pilots are making far too many bad decisions. (If they weren’t, we wouldn’t see nearly as many accidents in the sport). The logical conclusion from that is that not only can you not use a “good” result as evidence you made a good decision, you also cannot use other people’s decision making as an example for your own. If you want to “beat the odds” and have better personal safety than the statistical average, you have to make better decisions than the average

pilot. That will sometimes mean choosing not to fly at all, and it will sometimes mean passing up that turbulent thermal that is too close to the hill, and as a result going down to the LZ instead of staying up. It will sometimes mean cutting an XC flight short to take advantage of a more suitable landing area. In each of these cases, your friends may well not take the conservative route, and in most cases they will be rewarded with successful flights. In the end, however, making the more conservative decision will mean you'll still be around to fly another day.

Have fun. Fly safely.

See you in the sky!

Wills Wing, Inc.

www.willswing.com

HGMA AIRWORTHINESS STANDARDS

HGMA U2 145 COMPLIANCE VERIFICATION SPECIFICATION SHEET

GLIDER MODEL: U2 145

MANUFACTURED BY: Wills Wing, Inc.

All dimensions in inches; weights in pounds.

NOTE: These specifications are intended only as a guideline for determining whether a given glider is a certifIed model and whether it is in the certified configuration. Be aware, however, that no set of specifications, however detailed, can guarantee the ability to determine whether a glider is the same model, or is in the same configuration as was certified, or has those performance, stability, and structural characteristics required by the certification standards. An owner's manual is required to be delivered with each HGMA certified glider, and it is required that it contain additional airworthiness information.

1. Weight of glider with all essential parts and without coverbags and non-essential parts: 63
2. Leading Edge Dimensions
   a. Nose plate anchor hole to:
      1. Crossbar attachment hole 126.75
      2. Rear sail attachment point 183.0
   b. Outside diameter at:
      1. Nose 2.05
      2. Crossbar 2.05
      3. Rear sail attachment point 1.97
3. Crossbar Dimensions
   a. Overall pin to pin length from hole at leading edge bracket attachment to center of load bearing ball at glider centerline 116.63
   b. Largest outside dimension 2.44
4. Keel dimensions; least and greatest allowable distances, whether variable through tuning or through in-flight variable geometry, from the line joining the leading edge nose bolts to:
   a. The xbar center load bearing ball center 34.25 - 39.25
   b. The pilot hang loop 51.625 - 53.125
5. Sail Dimensions
   a. Chord lengths at
      1. 3 ft outboard of centerline 72
      2. 3 ft inboard of tip 43.75
   b. Span (extreme tip to tip) 377 (VGT)
6. Location of Information Placard Keel
   Location of Test Fly Sticker Keel
7. Recommended Pilot Weight Range 140 - 220
8. Recommended Pilot Proficiency USHGA Intermediate

HGMA AIRWORTHINESS STANDARDS

HGMA U2 16Ø COMPLIANCE VERIFICATION SPECIFICATION SHEET

GLIDER MODEL: U2 160

MANUFACTURED BY: Wills Wing, Inc.

All dimensions in inches; weights in pounds.

NOTE: These specifications are intended only as a guideline for determining whether a given glider is a certifIed model and whether it is in the certified configuration. Be aware, however, that no set of specifications, however detailed, can guarantee the ability to determine whether a glider is the same model, or is in the same configuration as was certified, or has those performance, stability, and structural characteristics required by the certification standards. An owner's manual is required to be delivered with each HGMA certified glider, and it is required that it contain additional airworthiness information.

1. Weight of glider with all essential parts and without coverbags and non-essential parts: 68
2. Leading Edge Dimensions
   a. Nose plate anchor hole to:
      1. Crossbar attachment hole 134.75
      2. Rear sail attachment point 194.5
   b. Outside diameter at:
      1. Nose 2.05
      2. Crossbar 2.05
      3. Rear sail attachment point 1.97
3. Crossbar Dimensions
   a. Overall pin to pin length from hole at leading edge bracket attachment to center of load bearing ball at glider centerline 123.88
   b. Largest outside dimension 2.44
4. Keel dimensions; least and greatest allowable distances, whether variable through tuning or through in-flight variable geometry, from the line joining the leading edge nose bolts to:
   a. The xbar center load bearing ball center 36.5 - 40.75
   b. The pilot hang loop 53.5 - 54.75
5. Sail Dimensions
   a. Chord lengths at
      1. 3 ft outboard of centerline 75.75
      2. 3 ft inboard of tip 43.75
   b. Span (extreme tip to tip) 396 (VGT)
6. Location of Information Placard Keel
   Location of Test Fly Sticker Keel
7. Recommended Pilot Weight Range 160 - 260
8. Recommended Pilot Proficiency USHGA Intermediate

| ID | Part No | Part Name | Qnt |
|---|---|---|---|
| 1 | 20G-1479 | CB Plug Litestream Leg Top Right | 1 |
| 2 | 20G-1478 | CB Plug Litestream Leg Top Left | 1 |
| 3 | 20G-1489 | CB Plug Litestream Leg Bottom Right | 1 |
| 4 | 20G-1488 | CB Plug Litestream Leg Bottom Left | 1 |
| 5 | 20G-1844 | Litestream Basetube Bracket Right | 1 |
| 6 | 20G-1843 | Litestream Basetube Bracket Left | 1 |
| 7 | 40F-1511 | BASETUBE ALUM SLPSTRM NO BRKTS | 1 |
| 8 | 40G-1471 | LITESTREAM LEG 65 W/O BRKTS (U2 145/T140/S2 155) | 2 |
| 8 | 40G-1474 | LITESTREAM LEG 68 W/O BRKTS (U2 160/T150) | 2 |
| 9 | 10N-1740 | CLINCH NUT 1/4 MS21042-4 | 4 |
| 10 | 20G-1712 | CBAR ELBOW AT TOP STREAM | 2 |
| 11 | 20G-1615 | BRACKET KEEL CNTR 44MM SADDLE | 1 |
| 12 | 10U-5125 | WASHER NYLON .75 X .316 X .020 | 3 |
| 13 | 10K-3133 | PIN BALL LOCK 1/4 X 33MM GRIP | 2 |
| 14 | 40P-3105 | WIRE BOTTOM SIDE SLIPSTREAM | 2 |
| 15 | 10N-1030 | LOCKNUT 5/16 AN365-5 | 1 |
| 16 | 10N-1730 | CLINCH NUT 3/16 MS20142-3 | 2 |
| 17 | 10G-1290 | MS20392-2C29 | 4 |
| 18 | 40P-3203 | WIRE SET BOTTOM FRONT SLIPSTREAM | 1 |
| 19 | 40P-3302 | WIRE SET BOTTOM REAR SLIPSTREAM | 1 |
| 20 | 10P-1100 | SAFETY RING AN 9491 SMALL | 4 |
| 21 | 20C-1802 | JAMCLEAT VCUT SMALL SS | 1 |
| 22 | 20P-1270 | BEARING .5 OD .312 ID .156 TH.SLDPRT | 2 |
| 23 | 10C-4301 | NAS623-3-30 | 2 |
| 24 | 10T-4113 | BUSH SS .312 X .028 X .240 | 2 |
| 25 | 10T-4114 | BUSH SS .312 X .028 X .125 | 3 |
| 26 | 10T-4120 | BUSH SS .3115 X .028 X .850 | 2 |
| 27 | 10T-1103 | SPACER AL .250 X .028 X .770 | 2 |
| 28 | 10T-5103 | SPACER NY .560 X .320 X .187 | 1 |
| 29 | 10M-1651 | SCREW PAN 8-32 X .375 THRD CUT | 2 |
| 30 | 10C-2011 | NAS517-4-1 | 2 |
| 31 | 20P-1201 | PULLEY RONSTAN #666 | 1 |
| 32 | 10A-3221 | AN5-22A | 1 |
| 33 | 10C-5201 | NAS623-4-20 | 2 |

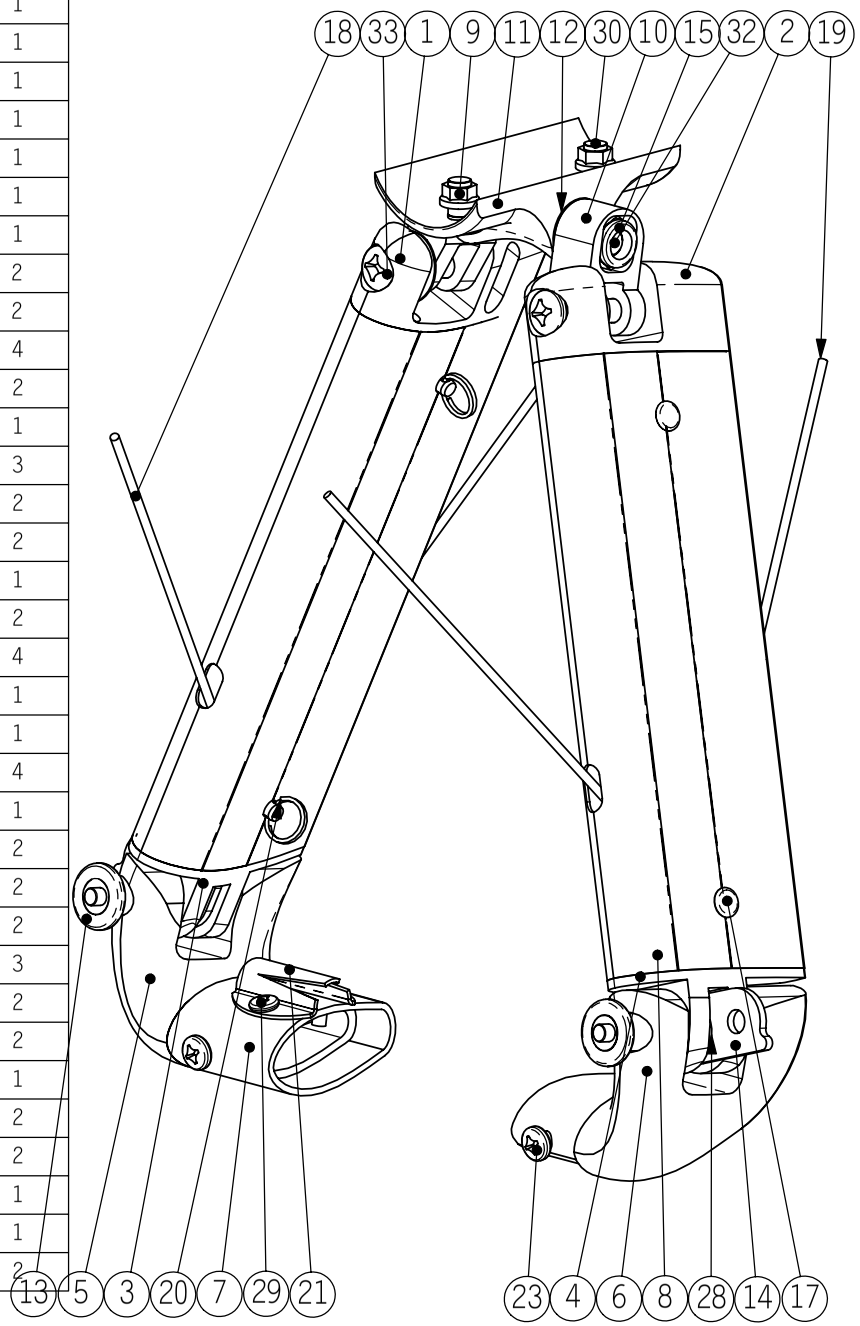


WILLS WING
500 BLUERIDGE AVE ● ORANGE, CA 92865 ● PH/FAX (714) 998-6359 / 998-0647

| TITLE: | PART NO: | REVISION: |
|---|---|---|
| U2 S2 Litestream Control Bar Assy | NA | E |

| SLDDWF ID: | MATERIAL: | DRAWN: | REVISED: | STATUS: | BY: |
|---|---|---|---|---|---|
| U2 Litestream C | | NA | 7/28/2004 | - | PEARSON |

T.U.S. .X ± .05
.XX ± .015
.XXX ± .003
.XXXX ± .0005
ANGLES ± 1/2°

| ID | Part No | Part Name | Qnt |
|---|---|---|---|
| 4 | 40P-3203 | WIRE SET BOTTOM FRONT SLIPSTREAM | 1 |
| 5 | 40P-3302 | WIRE SET BOTTOM REAR SLIPSTREAM | 1 |
| 6 | 10T-1103 | SPACER AL .250 X .028 X .770 | 2 |
| 7 | 40P-3105 | WIRE BOTTOM SIDE SLIPSTREAM | 2 |
| 8 | 10T-4120 | BUSH SS .3115 X .028 X .850 | 2 |
| 9 | 20P-1270 | BEARING .5 OD .312 ID .156 TH.SLDPRT | 2 |
| 10 | 10G-1290 | MS20392-2C29 | 4 |
| 11 | 10P-1100 | SAFETY RING AN 9491 SMALL | 4 |
| 12 | 10N-1740 | CLINCH NUT 1/4 MS21042-4 | 4 |
| 13 | 10U-5125 | WASHER NYLON .75 X .316 X .020 | 3 |
| 14 | 10T-4114 | BUSH SS .312 X .028 X .125 | 3 |
| 17 | 10T-5103 | SPACER NY .560 X .320 X .187 | 1 |
| 21 | 10K-3133 | PIN BALL LOCK 1/4 X 33MM GRIP | 2 |
| 22 | 10C-4301 | NAS623-3-30 | 2 |
| 23 | 10N-1730 | CLINCH NUT 3/16 MS20142-3 | 2 |
| 24 | 10T-4113 | BUSH SS .312 X .028 X .240 | 2 |
| 25 | 20C-1802 | JAMCLEAT VCUT SMALL SS | 1 |
| 26 | 10M-1651 | SCREW PAN 8-32 X .375 THRD CUT | 2 |
| 28 | 20G-1712 | CBAR ELBOW AT TOP STREAM | 2 |
| 29 | 10N-1030 | LOCKNUT 5/16 AN365-5 | 1 |
| 30 | 10C-2011 | NAS517-4-1 | 2 |
| 32 | 20P-1201 | PULLEY RONSTAN #666 | 1 |
| 33 | 10A-3221 | AN5-22A | 1 |
| 34 | 10C-5201 | NAS623-4-20 | 2 |

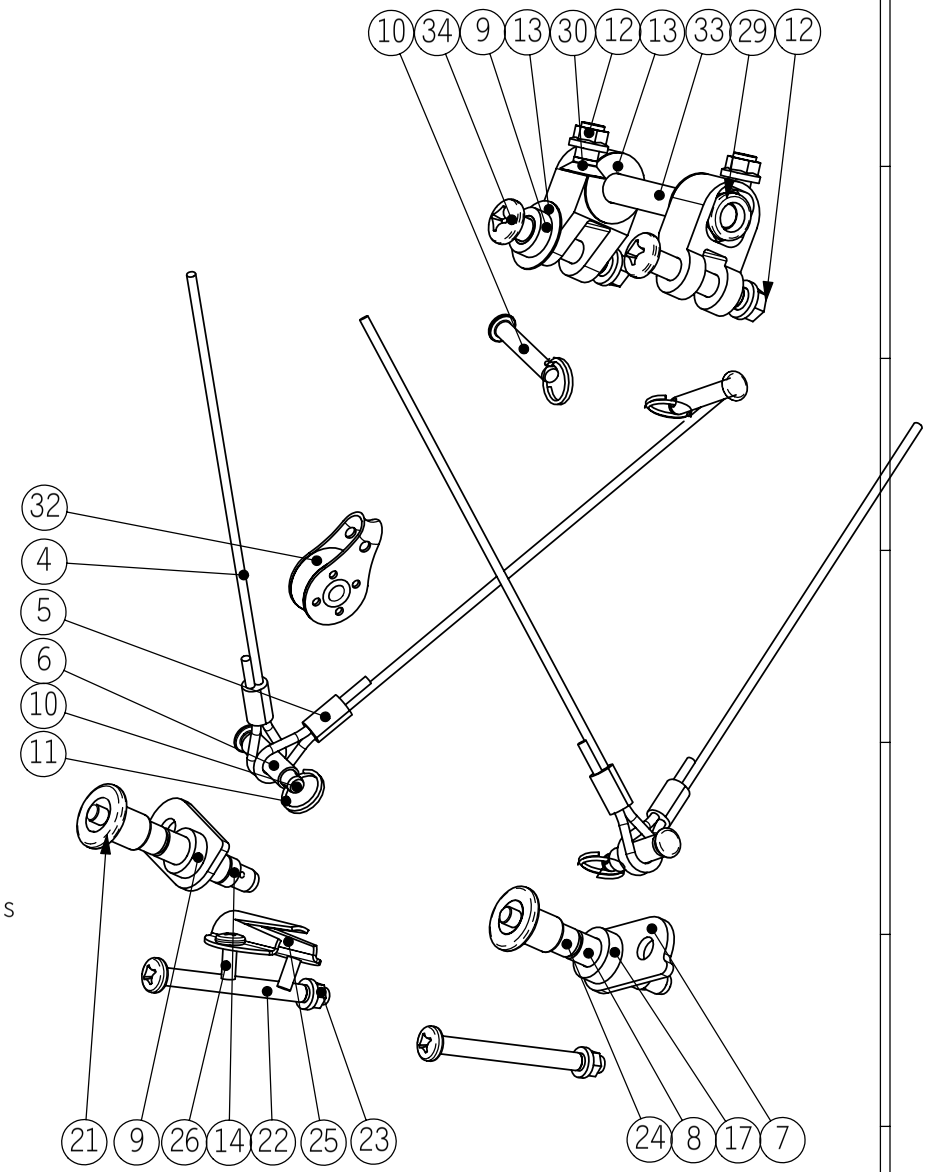


5/01/2003 Assembly Notes:
Item 25,15 permanent press fit in Basetube Brackets
Item 9 removeable fit in bottom leg plug. Front side of bushing is knurled for tight fit. Install from front to rear. Retains sidewire, VG bearing, washers and spacers.
Item 7 slip fit assembly aid for FR-RR wires in bottom leg plug.


WILLS WING
500 BLUERIDGE AVE ● ORANGE, CA 92865 ● PH/FAX (714) 998-6359 / 998-0647


| TITLE: | PART NO: | REVISION: | T.U.S. .X ± .05 |
|---|---|---|---|
| U2 S2 Litestream Control Bar Assy | | E | .XX ± .015 |
| | | | .XXX ± .003 |
| | | | .XXXX ± .0005 |
| | | | ANGLES ± 1/2° |

| SLDDWF ID: | MATERIAL: | DRAWN: | REVISED: | STATUS: | BY: |
|---|---|---|---|---|---|
| U2 Litestream C | | NA | 7/28/2004 | - | PEARSON |

| Item | Qnt | Part No | Rev | Part Name |
|---|---|---|---|---|
| 1 | 1 | 35C-2511 | | TUBE 1.0" * .042" AN 7075T6 |
| 2 | 1 | 15J-2301 | C | SPROG REAR END PADDLE 98 |
| 3 | 1 | 10N-3010 | A | Nut Sprog Adjustment |
| 4 | 1 | 20G-2446 | B | SPROG THREADED ADJUSTER 98 |
| 5 | 1 | 15N-1404 | | THIMBLE BUSH SLOT .074W X .190DP |
| 6 | 1 | 20E-2307 | A | TANG 3 HOLE BENT SPROG CABLE |
| 8 | 1 | 20G-2451 | C | BRACKET LE SPROG HINGE 52 LEFT |
| 9 | 1 | 20G-2441 | C | Sprog Fork Stainless |
| 10 | 1 | 20G-2448 | E | Sprog Fork Hinge Pillar |
| 11 | 1 | 10C-2361 | | NAS517-436 |
| 12 | 1 | 10T-4113 | | BUSH SS .312 X .028 X .240 |
| 13 | 2 | 10R-0605 | | MS20470 AD6-5 |
| 14 | 1 | 10C-4081 | | NAS623-3-8 |
| 17 | 1 | 10N-1730 | | CLINCH NUT 3/16 MS20142-3 |
| 18 | 1 | 10R-0366 | | RIVET AL 3/16 X .375 CHAAPQ6-4 |
| 19 | 2 | 10N-1740 | | CLINCH NUT 1/4 MS21042-4 |
| 20 | 1 | 10B-2191 | | AN24-19A |

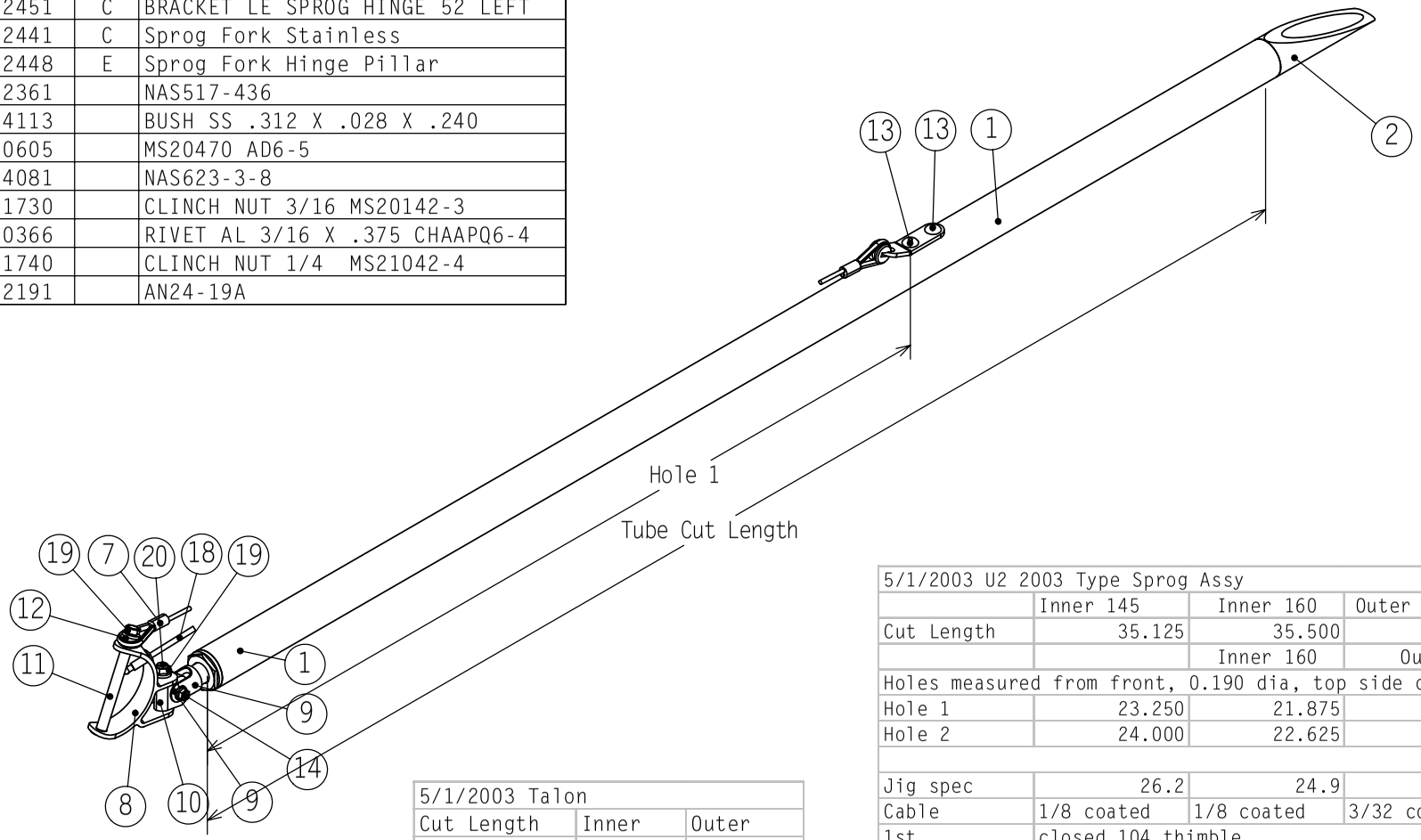


| 5/1/2003 U2 2003 Type Sprog Assy | | | |
|---|---|---|---|
| | Inner 145 | Inner 160 | Outer 145/160 |
| Cut Length | 35.125 | 35.500 | 21.750 |
| | | Inner 160 | Outer |
| Holes measured from front, 0.190 dia, top side only | | | |
| Hole 1 | 23.250 | 21.875 | 17.750 |
| Hole 2 | 24.000 | 22.625 | 18.500 |
| | | | |
| Jig spec | 26.2 | 24.9 | 20.7 |
| Cable | 1/8 coated | 1/8 coated | 3/32 coated |
| 1st | closed 104 thimble | | |
| 2nd | 3hole VG tang -bent | | |
| | | | |
| Procedure | | | |
| 1. Rivet wire assy to tube | | | |
| 2. Press threaded collar on tube | | | |
| 3. Press paddle on tube. Punch/dimple as rqd | | | |
| Note: U2 145 inner is Talon 140 inner | | | |

| 5/1/2003 Talon | | |
|---|---|---|
| Cut Length | Inner | Outer |
| Cable | 1/8 7x7 | 3/32 7x7 |
| T140 | 35.125 | 30.375 |
| T150 | 36.500 | 30.750 |
| T160 | 36.500 | 29.125 |
| | | |
| Holes at 23.25, 24.0 | | |
| Jig Spec 26.2 | | |


WILLS WING
500 BLUERIDGE AVE • ORANGE, CA 92865 • PH/FAX (714) 998-6359 / 998-0647


| TITLE: | PART NO: | REVISION: |
|---|---|---|
| Sprog Assy 2003 | NA | B |

| SLDDWF ID: | MATERIAL: | DRAWN: | REVISED: | STATUS: | BY: |
|---|---|---|---|---|---|
| sprog assy 2003 | NA | NA | 5/1/2003 | NA | PEARSON |

T.U.S. .X ± .05
.XX ± .015
.XXX ± .003
.XXXX ± .0005
ANGLES ± 1/2°

| Item | Part No | Rev | Part Name | U2/QTY. |
|---|---|---|---|---|
| 1 | 40K-1323 | A | KINGPOST STRM KP HANG W/BRKT | 1 |
| 2 | 15J-1502 | | TOP AT KINGPOST POLYCARB | 1 |
| 3 | 15J-1501 | | CAP AT KINGPOST TOP POLYCARB | 1 |
| 4 | 20G-2323 | B | KINGPOST TOP INSERT AT ALUM | 1 |
| 5 | 10M-1361 | | SCREW 6/32 FLSTR MACH HEAD SS | 1 |
| 6 | 10T-1121 | | SPACER AL .313 X .028 X 1.140 | 1 |
| 7 | 10T-5132 | | BUSH FGLASS .414 X .337 X 1.0 | 1 |
| 8 | 10C-5201 | | NAS623-4-20 | 1 |
| 9 | 10N-1740 | | CLINCH NUT 1/4 MS21042-4 | 2 |
| 10 | 10R-0342 | | RIVET AL 1/8 X .25 | 2 |
| 11 | 45J-1411 | A | HANG LOOP INTGRL ASSY KP STOCK | 1 |
| 12 | 40P-2301 | | WIRE TOP FRONT BALL SWG 3/32 | 1 |
| 13 | 40P-2401 | | WIRE TOP REAR BALL SWG 3/32 | 1 |
| 14 | 40P-2202 | | WIRE TOP SIDE BALL SWG 3/32 | 2 |
| 15 | 20G-2823 | B | Spreader Bar 1 pc Kingpost Hang | 1 |
| 16 | 45G-3056 | | SOCK ELASTIC KP BASE WHITE | 1 |
| 17 | 20P-1311 | | RAPIDLINK - OVAL 5MM 40MM SS | 1 |
| 18 | 10A-2211 | | AN4-21A | 1 |

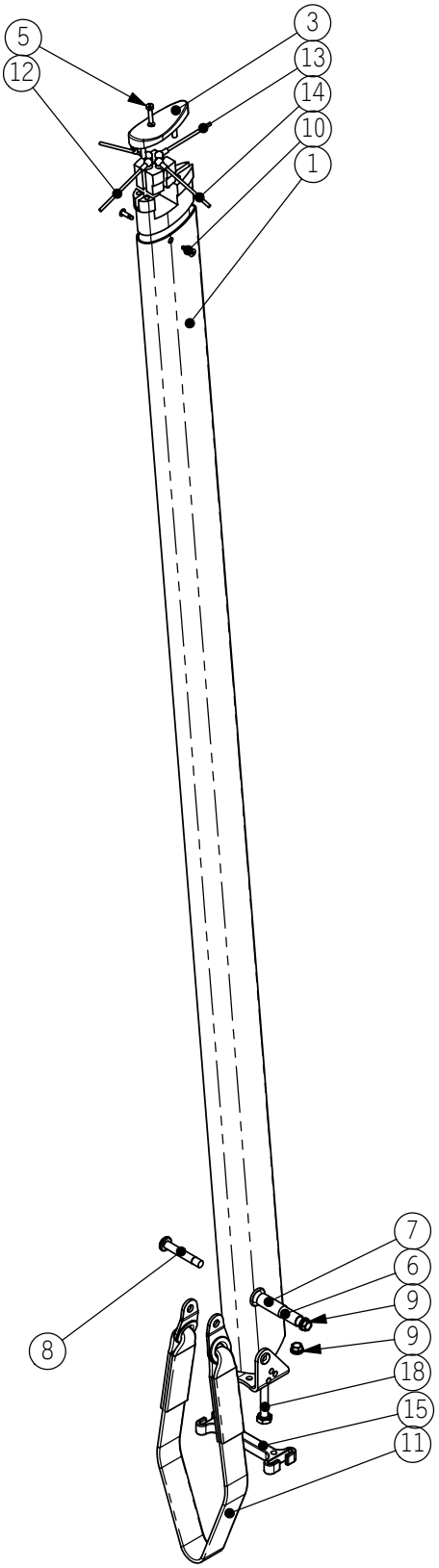


WILLS WING
500 BLUERIDGE AVE ● ORANGE, CA 92865 ● PH/FAX (714) 998-6359 / 998-0647

| TITLE: | PART NO: |
|---|---|
| U2 Kingpost Assembly | NA |

| SLDDWF ID: | DRAWN: | REVISED: | STATUS: | BY: | REVISION: |
|---|---|---|---|---|---|
| U2 Kingpost Assy | 3/5/2003 | 8/16/2003 | | PEARSON | C |

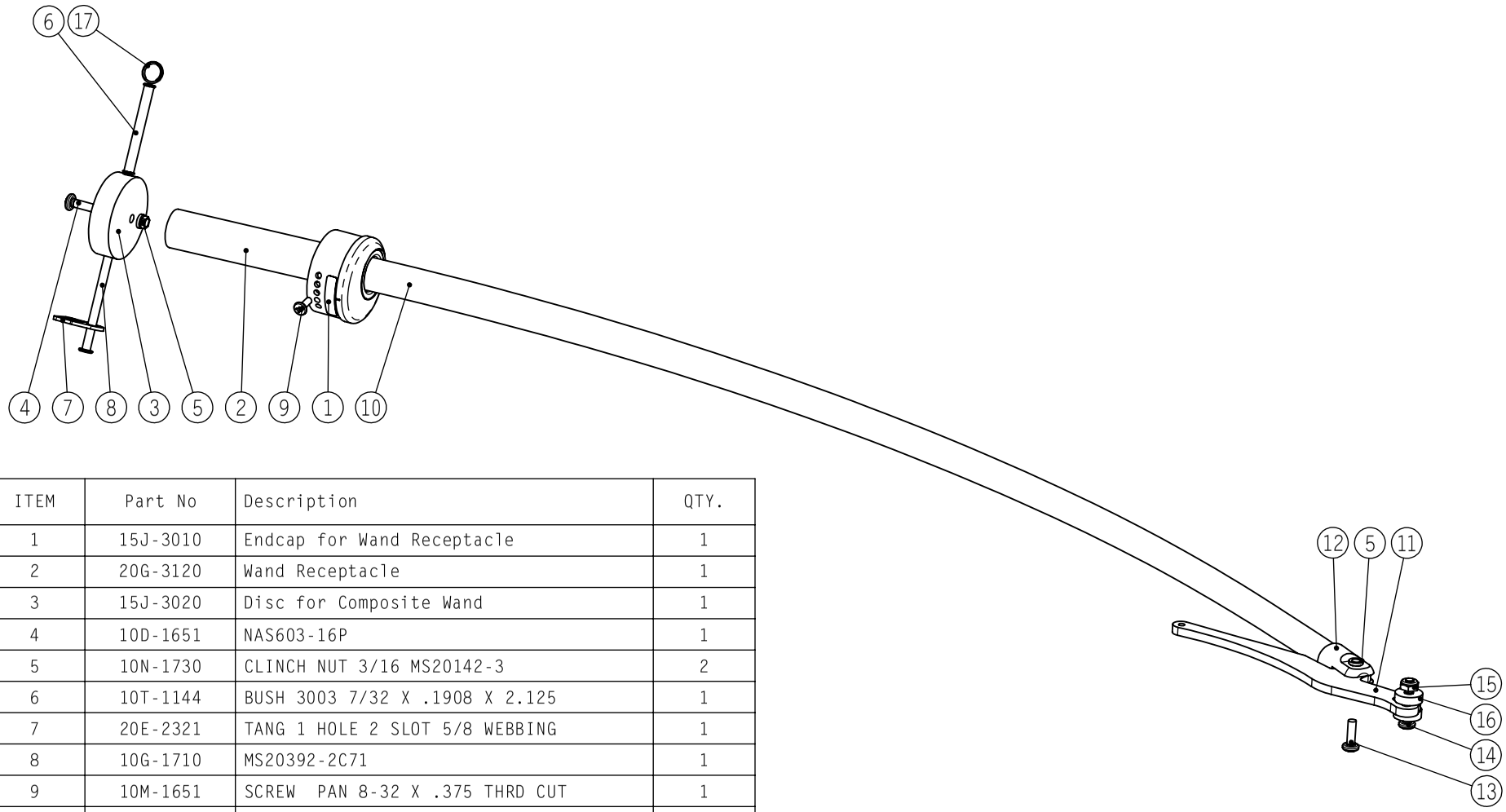


| ITEM | Part No | Description | QTY. |
|---|---|---|---|
| 1 | 15J-3010 | Endcap for Wand Receptacle | 1 |
| 2 | 20G-3120 | Wand Receptacle | 1 |
| 3 | 15J-3020 | Disc for Composite Wand | 1 |
| 4 | 10D-1651 | NAS603-16P | 1 |
| 5 | 10N-1730 | CLINCH NUT 3/16 MS20142-3 | 2 |
| 6 | 10T-1144 | BUSH 3003 7/32 X .1908 X 2.125 | 1 |
| 7 | 20E-2321 | TANG 1 HOLE 2 SLOT 5/8 WEBBING | 1 |
| 8 | 10G-1710 | MS20392-2C71 | 1 |
| 9 | 10M-1651 | SCREW PAN 8-32 X .375 THRD CUT | 1 |
| 10 | 40R-7601 | Tip Wand | 1 |
| 11 | 20G-3140 | Wand Lever | 1 |
| 12 | 20G-3130 | Wand Cup | 1 |
| 13 | 10D-1101 | NAS603-10P | 1 |
| 14 | 10C-4121 | NAS623-3-12 | 1 |
| 15 | 10N-1130 | LOCKNUT LOWPRO 3/16 MS21083-N03 | 1 |
| 16 | 10U-5110 | WASHER NYLON .620 X .210 X .192 | 2 |
| 17 | 10P-1100 | SAFETY RING AN 9491 SMALL | 1 |
| 18 | 70G-4019 | PLACARD - SAIL ADJUSTER ALIGN | 1 |

WILLS WING
500 BLUERIDGE AVE ● ORANGE, CA 92865 ● PH/FAX (714) 998-6359 / 998-0647

TITLE: Tip Wand Assembly

REVISION: E

| SLDDWF ID: | DOCUMENT ID: | DRAWN: | REVISED: | STATUS: | BY: |
|---|---|---|---|---|---|
| rear leading edge and wand | | 3/6/2003 | 3/22/2006 | | PEARSON |

| Item | Part Number | Description | U2/QTY . |
|---|---|---|---|
| 1 | 20C-1639 | NPLATE 2003 ASSY W/KHOLE BUTN LOC | 1 |
| 2 | 20C-1638 | NOSEPLATE UNIVERSAL 2003 | 1 |
| 3 | 20G-2905 | KEYHOLE COLLAR NUT ASSY | 1 |
| 4 | 10U-1141 | WASHER STEEL AN960-416 1/4 THIN | 4 |
| 5 | 10N-1740 | CLINCH NUT 1/4 MS21042-4 | 3 |
| 6 | 10T-5103 | SPACER NY .560 X .320 X .187 | 4 |
| 7 | 10A-2301 | AN4-30A | 1 |
| 8 | 10A-2261 | AN4-26A | 3 |
| 9 | 40P-2301 | WIRE TOP FRONT BALL SWEDG 3/32 | 1 |
| 10 | 40P-3203 | WIRE SET BOTTOM FRONT SLIPSTREAM | 1 |

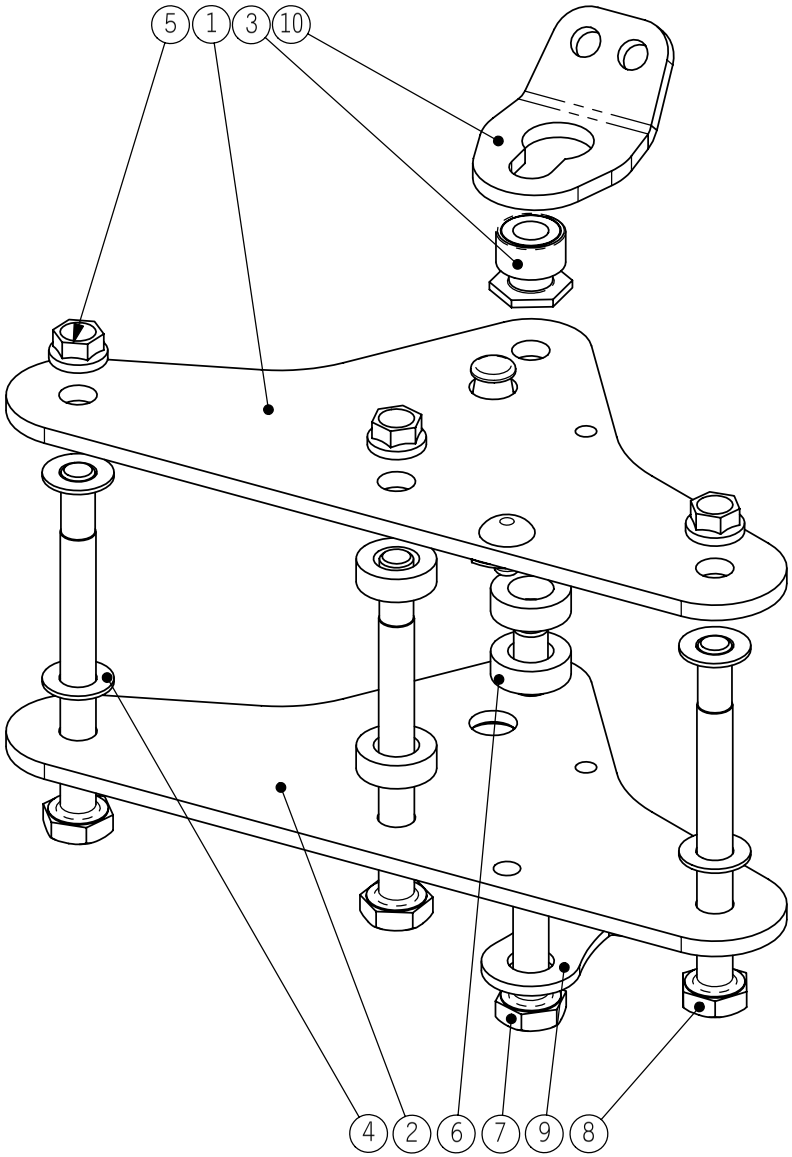


WILLS WING
500 BLUERIDGE AVE ● ORANGE, CA 92865 ● PH/FAX (714) 998-6359 / 998-0647

TITLE: U2 Noseplate Assembly

PART NO:

REVISION: B

| SLDDWF ID: | MATERIAL: | DRAWN: | REVISED: | STATUS: | BY: |
|---|---|---|---|---|---|
| noseplate | | 2/26/2003 | 10/5/2004 | | PEARSON |

T.U.S. .X ± .05
.XX ± .015
.XXX ± .003
.XXXX ± .0005
ANGLES ± 1/2°

| ITEM | Part No | Description | Qty |
|---|---|---|---|
| 1 | NA | U2 Rear Keel Sleeve | 1 |
| 2 | 20G-2906 | KEYHOLE COLLAR NUT ASSY REAR2 | 1 |
| 3 | 40P-4209 | WIRE XBAR SWEEP U2 SET SPREADER | 1 |
| 4 | 40P-2401 | WIRE TOP REAR BALL SWG 3/32 | 1 |
| 5 | 10A-2251 | AN4-25A | 1 |
| 6 | 10T-1161 | BUSH 3011-T3 .375 * .035 | 1 |
| 7 | 20A-1511 | BUTTON SPRING HAULBACK LOCK | 1 |
| 8 | 10R-0366 | RIVET AL 3/16 X .375 CHAAPQ6-4 | 1 |
| 9 | 40P-3302 | WIRE SET BTM REAR SLPSTR-LTSTR | 1 |
| 10 | 20E-2321 | TANG 1 HOLE 2 SLOT 5/8 WEBBING | 1 |
| 11 | 10U-1140 | WASHER STEEL AN960-416 1/4 THICK | 1 |

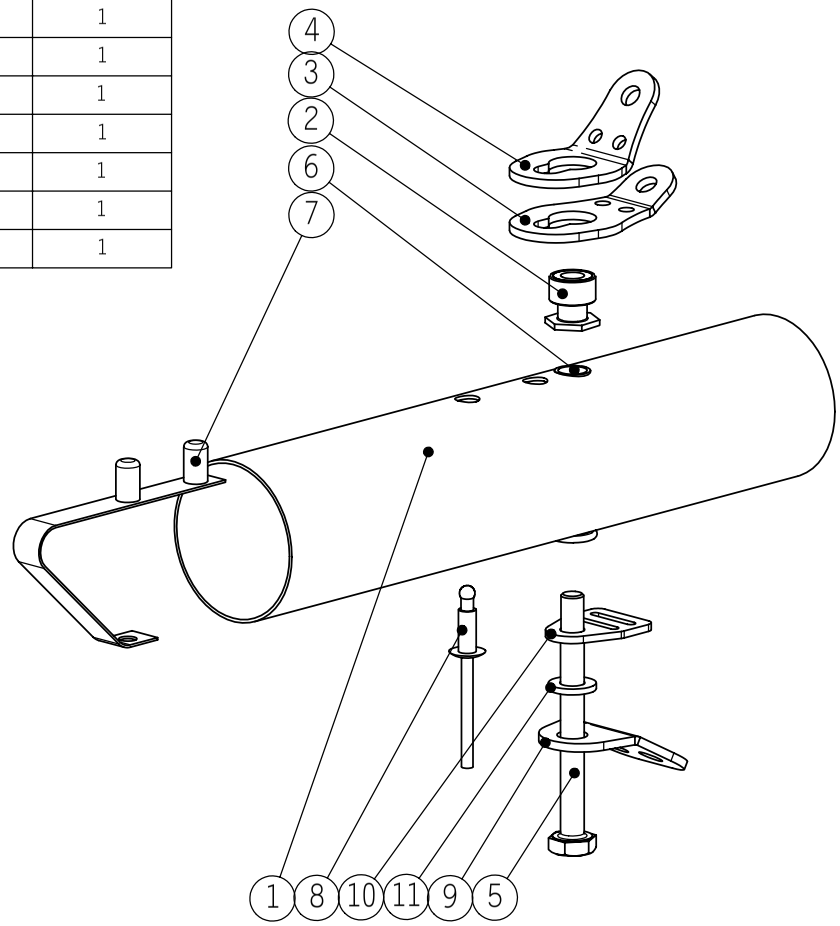


WILLS WING
500 BLUERIDGE AVE ● ORANGE, CA 92865 ● PH/FAX (714) 998-6359 / 998-0647

| TITLE: | PART NO: | REVISION: |
|---|---|---|
| U2/S2 Rear Keel | NA | C |

| SLDDWF ID: | MATERIAL: | DRAWN: | REVISED: | STATUS: | BY: |
|---|---|---|---|---|---|
| U2 Rear Keel | | 3/6/2003 | 10/5/2004 | | PEARSON |

T.U.S. .X ± .05
.XX ± .015
.XXX ± .003
.XXXX ± .0005
ANGLES ± 1/2°

| Item | Qnt | Part No | Rev | Part Name |
|---|---|---|---|---|
| 1 | 1 | 40D-2200 | A | U2 160 Xbar |
| 2 | 1 | 40C-2200 | A | U2 160 Front LE |
| 3 | 1 | 20G-1110 | B | XBAR/LE BRACKET 52MM LDNG EDGE |
| 4 | 1 | 40P-3105 | | WIRE BOTTOM SIDE SLIPSTREAM |
| 15 | 1 | 10A-2300 | | AN4-30 |
| 6 | 1 | 40P-2202 | | WIRE TOP SIDE BALL SWG 3/32 |
| 7 | 2 | 10N-1340 | | CASTLENUT 1/4 AN310-4 |
| 8 | 2 | 10T-1161 | | BUSH 3011-T3 .375 * .035 |
| 5 | 1 | 10A-2310 | | AN4-31 |
| 9 | 2 | 10R-0366 | | RIVET AL 3/16 X .375 CHAAPQ6-4 |
| 10 | 1 | 10N-1740 | | CLINCH NUT 1/4 MS21042-4 |
| 11 | 1 | 15C-6219 | | ENDCAP 62mm OD 58.2 ID |
| 12 | 1 | 10K-2031 | | SCREW SOCKET CAP SS 1/4x28x5/8 |
| 13 | 3 | 10P-1100 | | SAFETY RING AN 9491 SMALL |
| 14 | 1 | 10G-2650 | | MS20392-3C-65 |

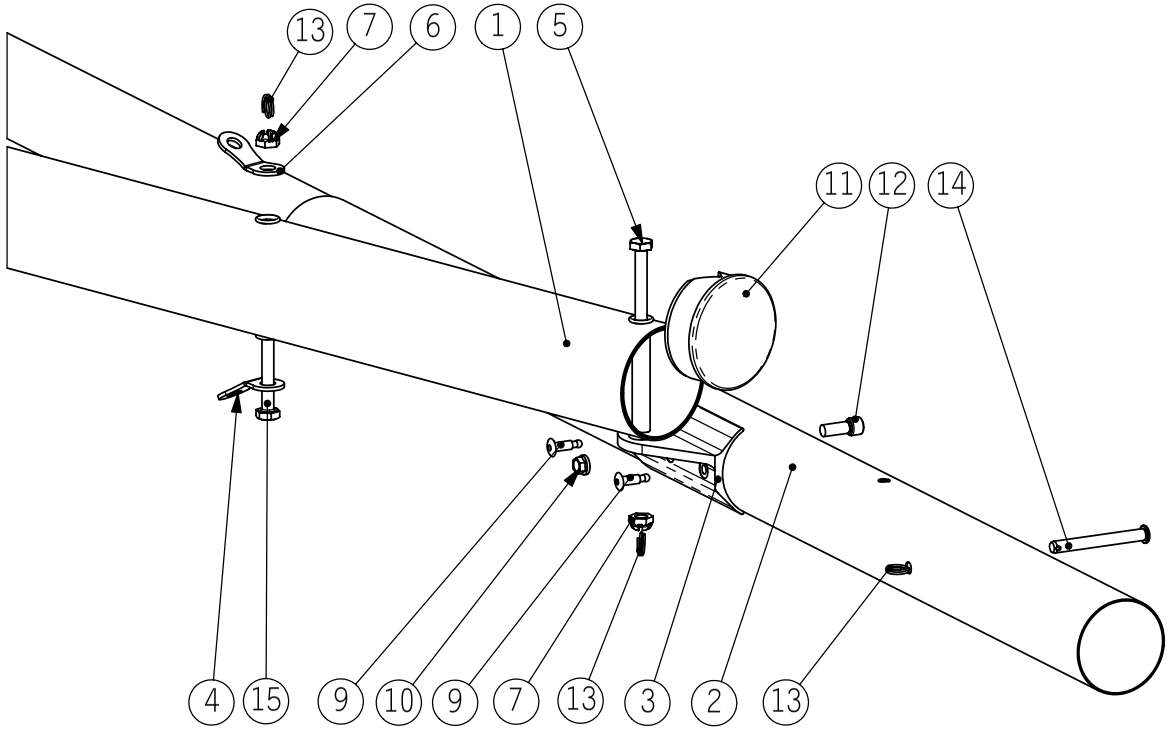


WILLS WING
500 BLUERIDGE AVE • ORANGE, CA 92865 • PH/FAX (714) 998-6359 / 998-0647

| TITLE: | PART NO: | REVISION: |
|---|---|---|
| U2 Xbar LE Junction | NA | A |

| SLDDWF ID: | MATERIAL: | DRAWN: | REVISED: | STATUS: | BY: |
|---|---|---|---|---|---|
| U2 Xbar LE | | 3/6/2003 | 3/26/2003 | | PEARSON |

T.U.S. .X ± .05
.XX ± .015
.XXX ± .003
.XXXX ± .0005
ANGLES ± 1/2°

| ITEM | Part No | Description | QTY. |
|---|---|---|---|
| 1 | 15J-2134 | BALL XBAR CNTR BALL JNT 62B VG HOLE | 1 |
| 2 | 15J-2117 | SOCKET XBAR CNTR BALL JNT 62B | 1 |
| 3 | 40P-4209 | WIRE XBAR SWEEP U2/S2 SET SPREADER | 1 |
| 4 | 20P-1333 | SHACKLE - SM RONSTAN MOFIFIED | 1 |
| 5 | 10C-4081 | NAS623-3-8 | 2 |
| 6 | 10C-0071 | NAS623-2-7 | 1 |
| 7 | 10C-5181 | NAS623-4-18 | 1 |
| 8 | 10C-5071 | NAS623-4-7 | 2 |
| 9 | 10N-1730 | CLINCH NUT 3/16 MS20142-3 | 2 |
| 10 | 10N-1740 | CLINCH NUT 1/4 MS21042-4 | 2 |
| 11 | 10N-1220 | LOCKNUT LOWPRO 0832 SS | 1 |
| 12 | 10N-0040 | LOCKNUT LOW PRO 52NKTE-048 | 1 |
| 13 | 10U-1130 | WASHER STEEL AN960-10 | 4 |
| 14 | 10U-1140 | WASHER STEEL AN960-416 1/4 THICK | 4 |
| 15 | 10U-5125 | WASHER NYLON .75 X .316 X .020 | 4 |
| 16 | 10U-4100 | WASHER BRASS .625X .281X .04 | 4 |
| 17 | 30J-3301 | ROPE 4mm SUPER PRE-STRETCH | 1 |
| 18 | 30J-3301 | ROPE 4mm SUPER PRE-STRETCH | 1 |
| 19 | 20P-1252 | PULLEY RONSTAN TRIPLE W/BECKT | 1 |
| 20 | 20P-1250 | PULLEY RONSTAN TRIPLE NO BECKT | 1 |

Note orientation of brackets, right over left

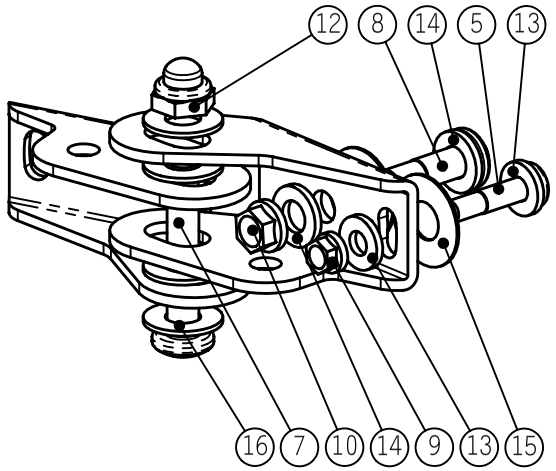


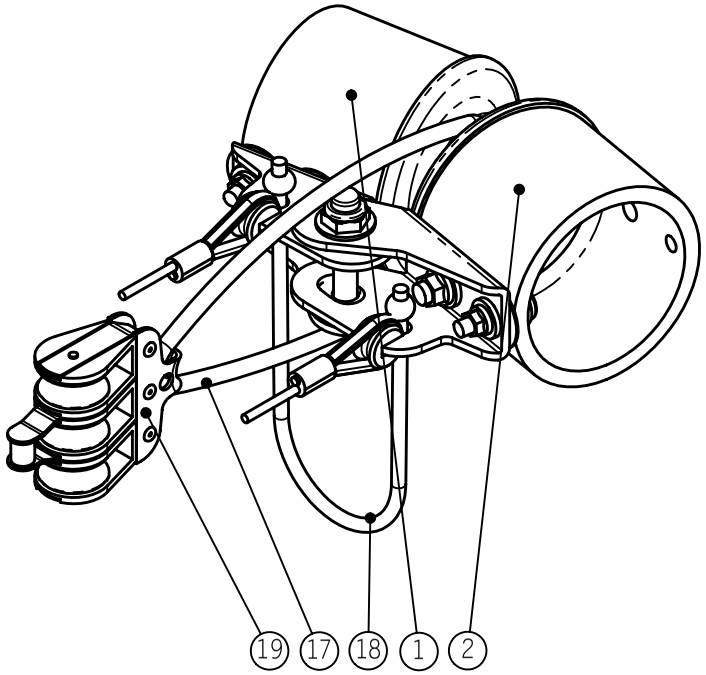


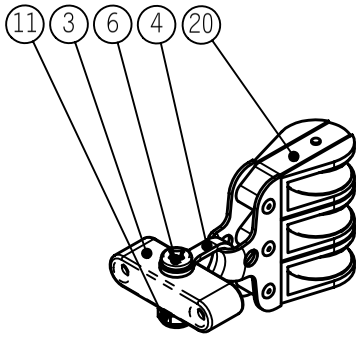


WILLS WING
500 BLUERIDGE AVE ● ORANGE, CA 92865 ● PH/FAX (714) 998-6359 / 998-0647

| TITLE: | | | | | REVISION: |
|---|---|---|---|---|---|
| U2/S2 Xbar Center and VG | | | | | E |
| SLDDWF ID: | DOCUMENT ID: | DRAWN: | REVISED: | STATUS: | BY: |
| U2 Ball Center | | 3/6/2003 | 7/30/2005 | | PEARSON |

| ITEM NO. | QTY. | DESCRIPTION | MATERIAL | CUT LENGTH (in) | CUT LENGTH (mm) | WEIGHT |
|---|---|---|---|---|---|---|
| 1 | 1 | U2 145 Keel front tube | 42mm x 0.9mm 7075-T6 | 97.63 | 2480 | 1.754 |
| 2 | 1 | U2 145 Keel front slv | 44mm x 0.9mm 7075-T6 | 6.00 | 152 | 0.112 |
| 3 | 1 | U2 145 Keel stinger | 42mm x 0.9mm 7075-T6 | 37.00 | 940 | 0.658 |
| 4 | 1 | U2 145 Keel middle slv2 | 44mm x 0.9mm 7075-T6 | 15.00 | 381 | 0.278 |
| 5 | 1 | U2 145 Keel rear slv | 44mm x 0.9mm 7075-T6 | 8.00 | 203 | 0.150 |

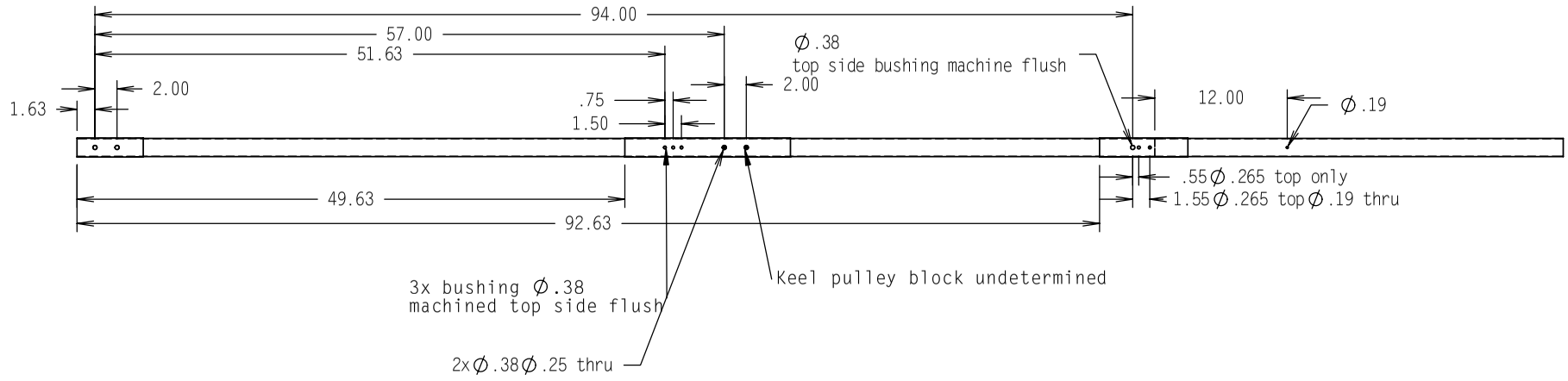


Rev B. 2003-05-28 Use for replacement parts.
1. Fwd CG Hole Back from 51.0 to 51.625
2. CG hole spacing 0.75

Wt 2.952 lb

WILLS WING
500 BLUERIDGE AVE • ORANGE, CA 92865 • PH/FAX (714) 998-6359 / 998-0647

| TITLE: | PART NO: | REVISION: |
|---|---|---|
| U2 145 Keel | 40B-1223 | B |

| SLDDWF ID: | MATERIAL: | DRAWN: | REVISED: | STATUS: | BY: |
|---|---|---|---|---|---|
| U2 145 Airframe | see BOM | 1/28/2003 | 5/28/2003 | NA | PEARSON |

T.U.S. .X ± .05
.XX ± .015
.XXX ± .003
.XXXX ± .0005
ANGLES ± 1/2°

| ITEM NO. | QTY. | DESCRIPTION | MATERIAL | CUT LENGTH (in) | CUT LENGTH (mm) | WEIGHT |
|---|---|---|---|---|---|---|
| 1 | 1 | U2 145 Front LE tube | 50mm x 0.9mm 7075-T6 | 133.50 | 3391 | 2.871 |
| 2 | 1 | U2 145 Front LE front slv | 52mm x 0.9mm 7075-T6 | 3.00 | 76 | 0.066 |
| 3 | 1 | U2 145 Front LE middle slv | 52mm x 0.9mm 7075-T6 | 27.50 | 699 | 0.615 |

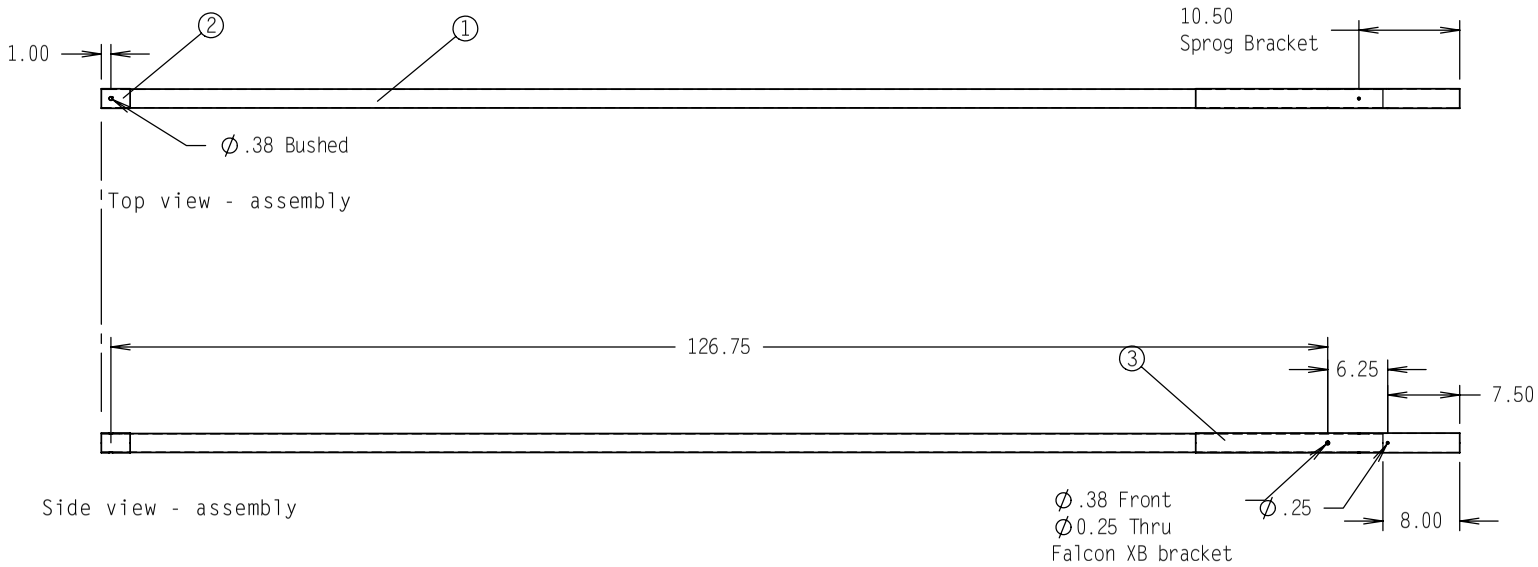


Wt 3.552 lb

WILLS WING

500 BLUERIDGE AVE ● ORANGE, CA 92865 ● PH/FAX (714) 998-6359 / 998-0647

| TITLE: | PART NO: | REVISION: |
|---|---|---|
| U2 145 Front LE | 40C-2200 | A |

| SLDDWF ID: | MATERIAL: | DRAWN: | REVISED: | STATUS: | BY: |
|---|---|---|---|---|---|
| U2 145 Airframe | see BOM | 1/28/2003 | 5/6/2003 | NA | PEARSON |

T.U.S. .X ± .05
.XX ± .015
.XXX ± .003
.XXXX ± .0005
ANGLES ± 1/2°

| ITEM NO. | QTY. | DESCRIPTION | MATERIAL | CUT LENGTH (in) | CUT LENGTH (mm) | WEIGHT |
|---|---|---|---|---|---|---|
| 1 | 1 | U2 145 Rear LE tube | 50mm x 0.9mm 7075-T6 | 55.50 | 1410 | 1.15 |
| 2 | 1 | U2 145 Rear LE slv | 52mm x 0.9mm 7075-T6 | 3.00 | 76 | 0.067 |

Note: use 'G' drill to pin in fixture

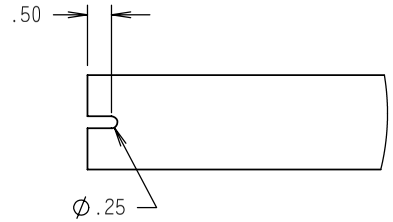


DETAIL A - SLOT
SCALE 1 : 4

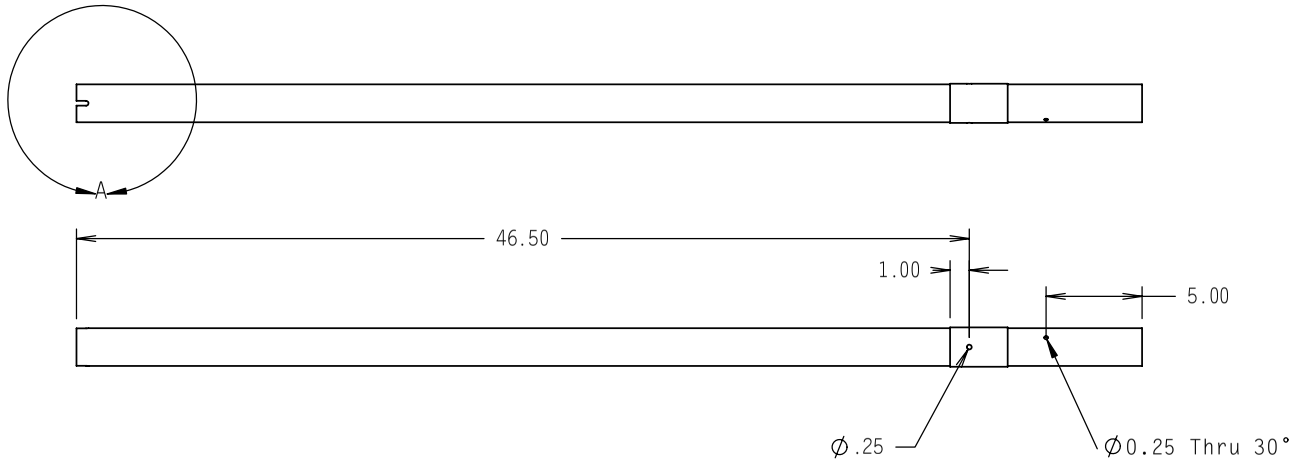


Wt 1.259 lb

WILLS WING
500 BLUERIDGE AVE • ORANGE, CA 92865 • PH/FAX (714) 998-6359 / 998-0647

| TITLE: | PART NO: | REVISION: |
|---|---|---|
| U2 145 Rear LE | 40C-3200 | A |

| SLDDWF ID: | MATERIAL: | DRAWN: | REVISED: | STATUS: | BY: |
|---|---|---|---|---|---|
| U2 145 Airframe | see BOM | 1/28/2003 | 5/6/2003 | NA | PEARSON |

T.U.S. .X ± .05
.XX ± .015
.XXX ± .003
.XXXX ± .0005
ANGLES ± 1/2°

| ITEM NO. | QTY. | DESCRIPTION | MATERIAL | CUT LENGTH (in) | CUT LENGTH (mm) | WEIGHT |
|---|---|---|---|---|---|---|
| 1 | 1 | U2 145 Xbar tube | 62mm x 0.9mm 7075-T6 | 116.50 | 2959 | 3.117 |
| 2 | 1 | U2 145 Xbar slv | 60mm x 0.9mm 7075-T6 | 18.00 | 457 | 0.465 |

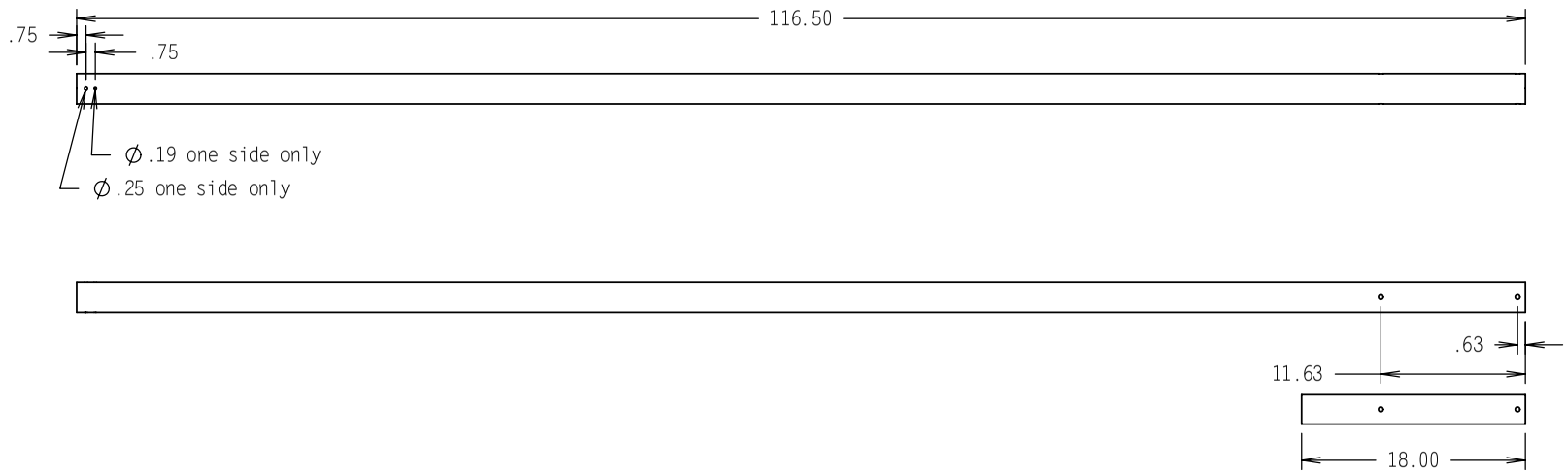


Rev B 5/06/2003. Sleeve length from 16.0 to 18.0

Wt 3.582 lb

WILLS WING

500 BLUERIDGE AVE ● ORANGE, CA 92865 ● PH/FAX (714) 998-6359 / 998-0647

| TITLE: | PART NO: | REVISION: |
|---|---|---|
| U2 145 Xbar | 40D-2200 | B |

| SLDDWF ID: | MATERIAL: | DRAWN: | REVISED: | STATUS: | BY: |
|---|---|---|---|---|---|
| U2 145 Airframe | see BOM | 1/28/2003 | 5/6/2003 | NA | PEARSON |

T.U.S. .X ± .05
.XX ± .015
.XXX ± .003
.XXXX ± .0005
ANGLES ± 1/2°

| ITEM NO. | QTY. | DESCRIPTION | MATERIAL | CUT LENGTH (in) | CUT LENGTH (mm) | WEIGHT |
|---|---|---|---|---|---|---|
| 1 | 1 | U2 160 Keel front tube | 42mm x 0.9mm 7075-T6 | 97.63 | 2480 | 1.754 |
| 2 | 1 | U2 160 Keel front slv | 44mm x 0.9mm 7075-T6 | 6.00 | 152 | 0.112 |
| 3 | 1 | U2 160 Keel stinger | 42mm x 0.9mm 7075-T6 | 37.00 | 940 | 0.658 |
| 4 | 1 | U2 160 Keel middle slv2 | 44mm x 0.9mm 7075-T6 | 15.00 | 381 | 0.278 |
| 5 | 1 | U2 160 Keel rear slv | 44mm x 0.9mm 7075-T6 | 8.00 | 203 | 0.150 |

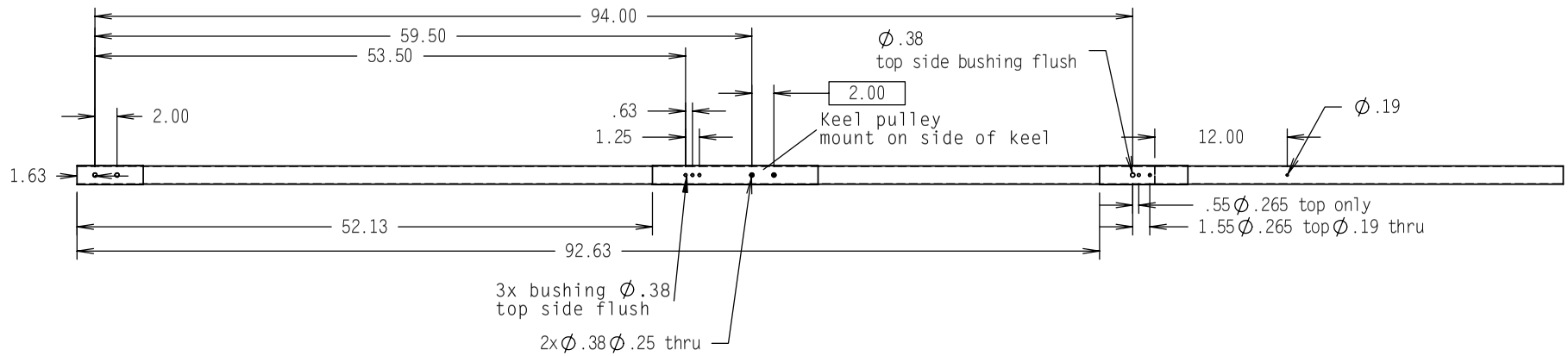


1/28/03 Rev P3+ CG in rear hole at 54.0 from nose
increase CG spacing to .63 next proto. Install flush bushing
2/13/03 Rev A CG back 0.5 for production proto

2.952 lb

WILLS WING
500 BLUERIDGE AVE • ORANGE, CA 92865 • PH/FAX (714) 998-6359 / 998-0647

| TITLE: | PART NO: | REVISION: |
|---|---|---|
| U2 160 Keel | 40B-1223 | A |

| SLDDWF ID: | MATERIAL: | DRAWN: | REVISED: | STATUS: | BY: |
|---|---|---|---|---|---|
| U2 160 Airframe | see BOM | 6/20/2002 | 5/6/2003 | NA | PEARSON |

T.U.S. .X ± .05
.XX ± .015
.XXX ± .003
.XXXX ± .0005
ANGLES ± 1/2°

| ITEM NO. | QTY. | DESCRIPTION | MATERIAL | CUT LENGTH (in) | CUT LENGTH (mm) | WEIGHT |
|---|---|---|---|---|---|---|
| 1 | 1 | U2 160 Front LE tube | 50mm x 0.9mm 7075-T6 | 145.50 | 3696 | 3.129 |
| 2 | 1 | U2 160 Front LE front slv | 52mm x 0.9mm 7075-T6 | 3.00 | 76 | 0.066 |
| 3 | 1 | U2 160 Front LE middle slv | 52mm x 0.9mm 7075-T6 | 35.50 | 902 | 0.794 |

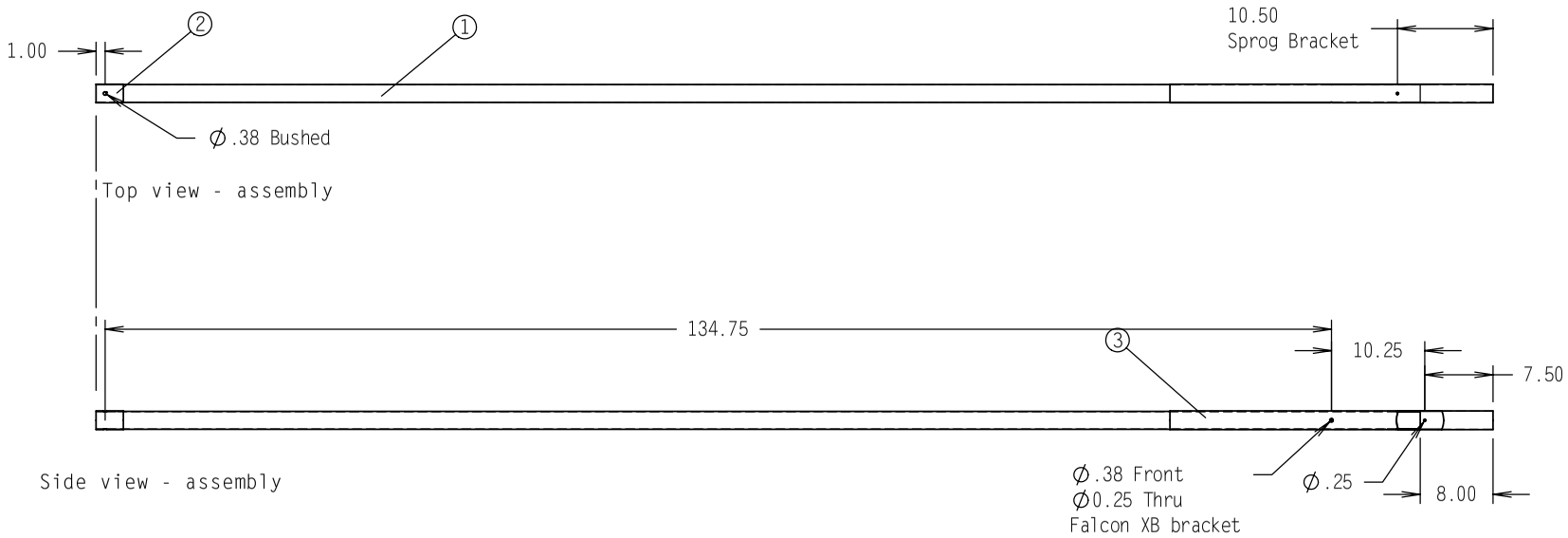


3.989 lb

WILLS WING

500 BLUERIDGE AVE ● ORANGE, CA 92865 ● PH/FAX (714) 998-6359 / 998-0647

| TITLE: | PART NO: | REVISION: |
|---|---|---|
| U2 160 Front Leading Edge | 40C-2200 | A |

| SLDDWF ID: | MATERIAL: | DRAWN: | REVISED: | STATUS: | BY: |
|---|---|---|---|---|---|
| U2 160 Airframe | see BOM | 6/20/2002 | 2/13/2003 | NA | PEARSON |

T.U.S. .X ± .05
.XX ± .015
.XXX ± .003
.XXXX ± .0005
ANGLES ± 1/2°

| ITEM NO. | QTY. | DESCRIPTION | MATERIAL | CUT LENGTH (in) | CUT LENGTH (mm) | WEIGHT |
|---|---|---|---|---|---|---|
| 1 | 1 | U2 160 Rear LE tube | 50mm x 0.9mm 7075-T6 | 55.50 | 1410 | 1.193 |
| 2 | 1 | U2 160 Rear LE slv | 52mm x 0.9mm 7075-T6 | 3.00 | 76 | 0.067 |

Note: use 'G' drill to align in fixture

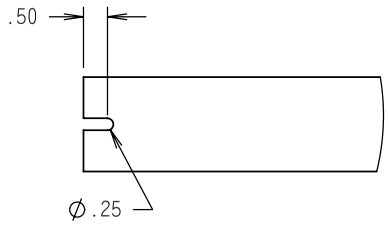


DETAIL A - SLOT
SCALE 1 : 4

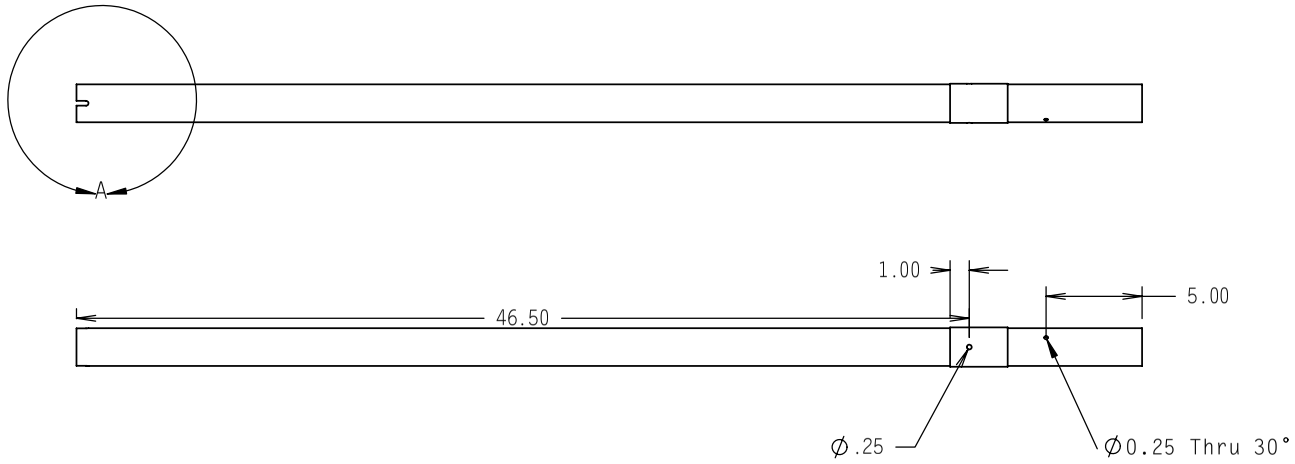


1.259 lb

WILLS WING

500 BLUERIDGE AVE ● ORANGE, CA 92865 ● PH/FAX (714) 998-6359 / 998-0647

| TITLE: | PART NO: | REVISION: |
|---|---|---|
| U2 160 Rear Leading Edge | 40C-3200 | A |

| SLDDWF ID: | MATERIAL: | DRAWN: | REVISED: | STATUS: | BY: |
|---|---|---|---|---|---|
| U2 160 Airframe | see BOM | 6/20/2002 | 2/13/2003 | NA | PEARSON |

T.U.S. .X ± .05
.XX ± .015
.XXX ± .003
.XXXX ± .0005
ANGLES ± 1/2°

| ITEM NO. | QTY. | DESCRIPTION | MATERIAL | CUT LENGTH (in) | CUT LENGTH (mm) | WEIGHT |
|---|---|---|---|---|---|---|
| 1 | 1 | U2 160 Xbar tube | 62mm x 0.9mm 7075-T6 | 123.75 | 3143 | 3.312 |
| 2 | 1 | U2 160 Xbar slv | 60mm x 0.9mm 7075-T6 | 18.00 | 457 | 0.465 |

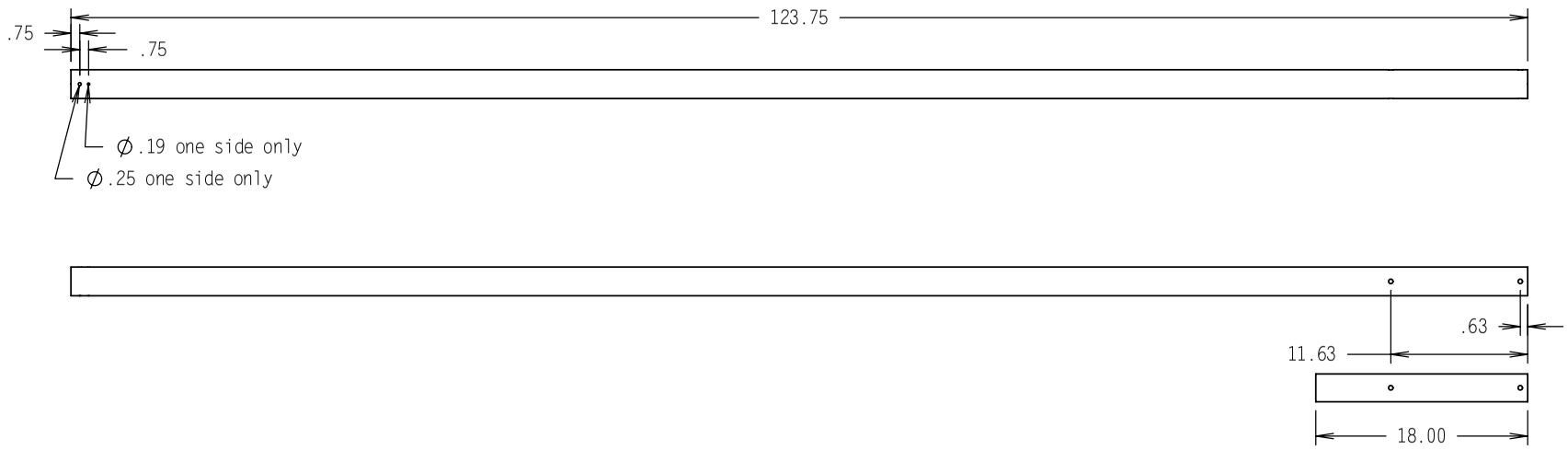


Rev B 5/06/2003 sleeve lengthened from 16.0 to 18.0

3.776 lb

WILLS WING
500 BLUERIDGE AVE • ORANGE, CA 92865 • PH/FAX (714) 998-6359 / 998-0647

| TITLE: | PART NO: | REVISION: |
|---|---|---|
| U2 160 Xbar | 40D-2200 | B |

| SLDDWF ID: | MATERIAL: | DRAWN: | REVISED: | STATUS: | BY: |
|---|---|---|---|---|---|
| U2 160 Airframe | see BOM | 6/20/2002 | 5/6/2003 | NA | PEARSON |

T.U.S. .X ± .05
.XX ± .015
.XXX ± .003
.XXXX ± .0005
ANGLES ± 1/2°